1100 Series Framed Bypass Slider

3/16” Glass

INSTALLATION INSTRUCTIONS

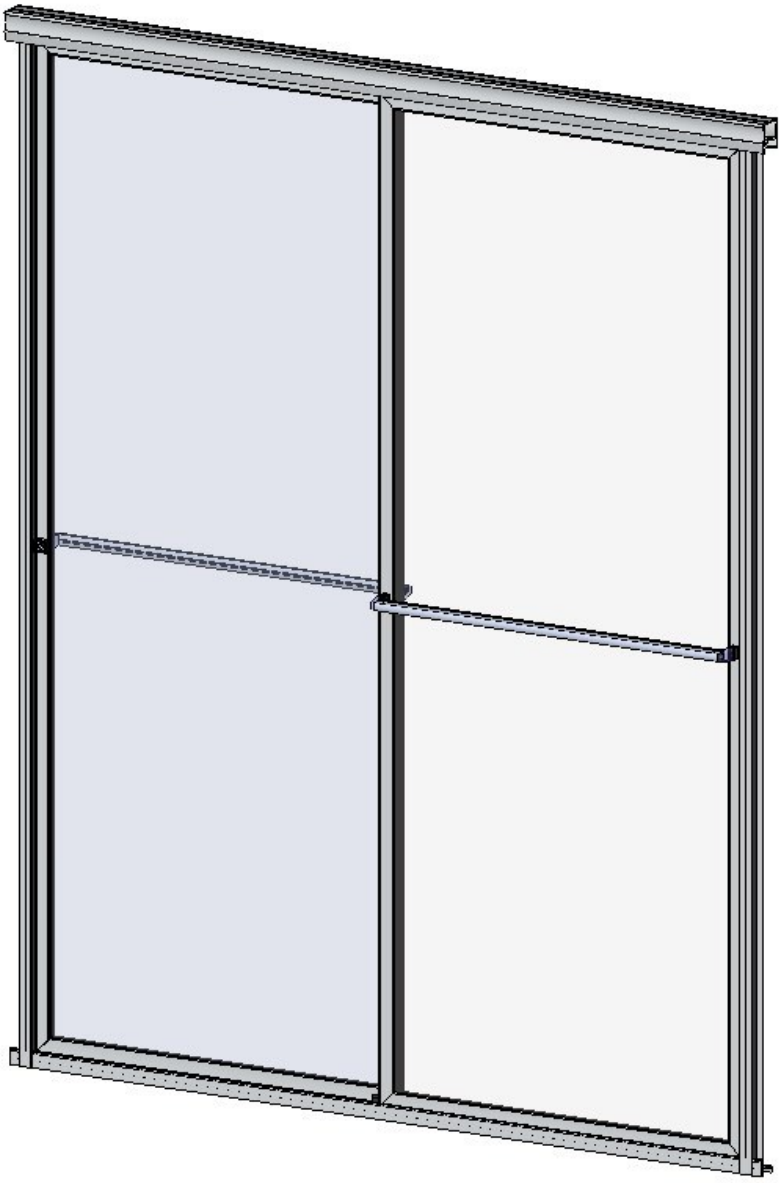

Tools:

To install your New Shower Enclosure, you may need the following:

- Pencil
- Low Tack Tape
- Tape Measure
- 4’ & 6’ Levels
- #2 Phillips Screwdriver
- Drill
- 1/8” & 3/16” Drill Bit
- 3/16” Masonry Drill Bit
- Center Punch
- Files
- Hack Saw
- Caulk Gun
- Clear Silicone Caulk
- Suction Cups

Safety Notes:

- This unit is best installed by two people.
- Handle the glass panels carefully and protect the edges. Safety tempered glass is very resistant to breakage, but the sharp corners of the panels can damage tile and flooring surfaces.
- The glass can break if unequal pressure is applied during installation.
- Please wear safety glasses whenever drilling or cutting. When drilling holes in ceramic tile or marble, use a center punch and hammer to carefully break the glazed surface to prevent skidding when drilling.

NOTE: Tempered glass cannot be cut.

Installation Notes:

- A minimum of 1” thread engagement is required of all fasteners. Depending on the application the customer maybe required to supply the proper fasteners to ensure adequate engagement.
- Wall Jambs and Guide maybe installed using wall plugs where no backing is found.
- Use caution to not pierce plumbing or electric lines while installing door hardware.
- Cover the drain with tape prior to installation to prevent loss of small parts.
- Unpack your unit carefully and inspect for freight damage. Lay out and identify all parts using the instruction sheet as a reference. Before discarding the carton, check to see that no small hardware parts have fallen to the bottom of the box. If any parts are damaged or missing, refer to the description noted in the instructions when contacting your dealer for replacements.

Maintenance:

Two primary materials are used to manufacture your new shower enclosure: tempered glass and anodized aluminum. To assure a long lasting finish on the enclosure, wipe it down with a towel after each use.

For occasional, more concentrated cleaning efforts, we find that **Lysol® Non-Abrasive Bathroom Cleaner** works extremely well. Be sure that any over spray falling on the aluminum frame is rinsed thoroughly and dried. Many over-the-counter cleaners, if applied to the aluminum and left on, will harm the metal finish and cause permanent damage even though their directions indicate safe use on shower doors. Never use a scouring agent to clean the aluminum.

For units with ***Redi Clear®*** please use Maintain spray from the maintenance on the glass. Please contact customer service for details and to purchase the maintenance kit.

This unit maybe installed with the inner panel to either side.

In order to minimize chances of water leakage, please install the inner panel closest to the shower head. Installation with the inner panel opposite of the shower head when closed leaves a gap between the panels that water may pass through.

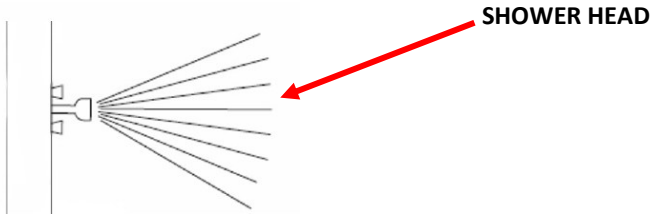

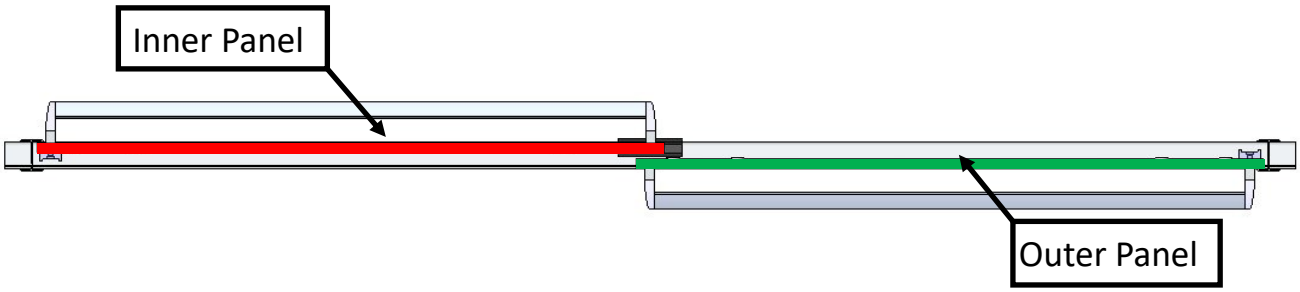

MINIMUM THRESHOLD WIDTH

This unit requires a minimum 1 3/4” threshold width.

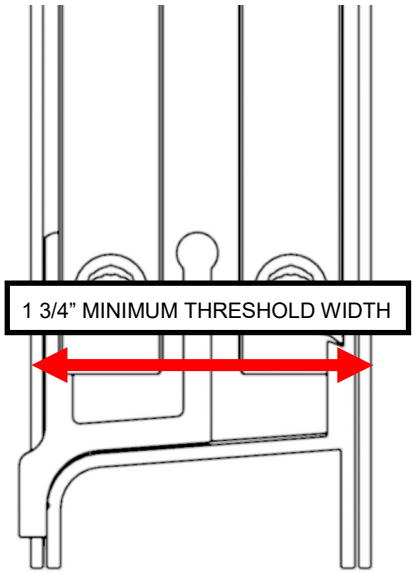

The unit requires 1 3/4” of threshold width to ensure the unit does not hang off of the edge. It is up to the installer to determine if the threshold is wide enough to drill into so as to not damage the finished surface. Please take appropriate precautions to be sure tile surfaces are wide enough so that they are not broken during the installation process.

DRILLING HOLES

This unit maybe installed on many types of walls. Please reference this section to determine how to drill holes in your walls based on what material your walls are made of.

Fiberglass Enclosure: Use standard 1/8” drill bit to drill holes through the fiberglass wall material at marked locations. Place a small amount of silicone into each hole before installing the screw.

If the fiberglass enclosure will not hold the screw:
Drill a 3/16” hole at the marked location. Insert a small amount of silicone into each hole. Place a supplied blue wall plug into the hole. You may, with a razor blade, carefully cut the head off of wall plug so it is flush with the finished wall material.

Tile or Solid Surface *with* Blocking: Use a center punch at each marked location to prevent the drill from walking. Use a 3/16” masonry bit to drill through the finished wall material (tile and backer board) **ONLY.** Use a standard 1/8” drill bit to drill 1” deep pilot holes in the blocking. Insert a small amount of silicone in each hole before installing the screw. 1” thread engagement of screws in blocking is required. The customer maybe required to supply their own screws based on their finished wall material thickness.

Tile or Solid Surface *without* Blocking: Use a center punch at each marked location to prevent the drill from walking. Use a 3/16” masonry bit to drill through the wall material. Insert a small amount of silicone into each hole. Place a supplied blue wall plug into the hole. You may, with a razor blade, carefully cut the head off of wall plug so it is flush with the finished wall material.

IDENTIFY GLASS PANELS

If the panels have the *Redi Clear*® coating, there will be labels identifying the coated side. Install the panels with the coated side to the inside.

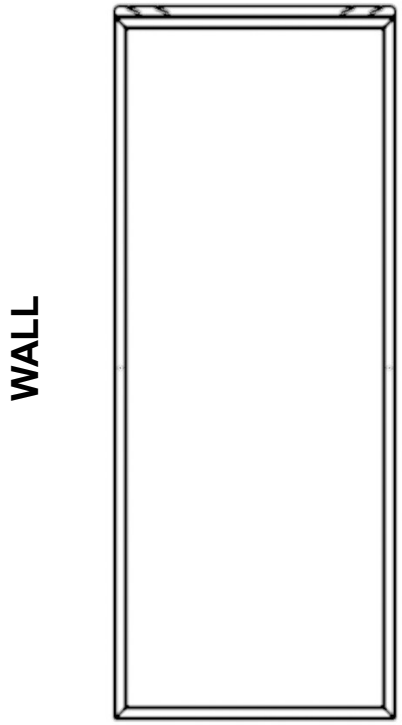

The **Inner** and **Outer Panel** have the same mounting slots.

The installation of the **Towel Bar Assembly** will determine inside versus outside panel.

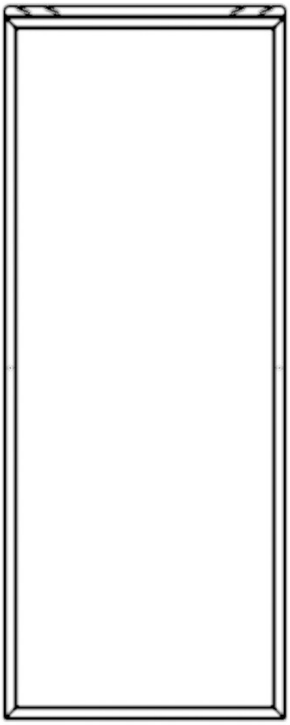

Parts List— 3/16” 1100 Series Bypass Slider

ITEM NO.	NUMBER	DESCRIPTION	QTY.
1		GLASS PANEL, OUTER	1
2		GLASS PANEL, INNER	1
3	SC884	HEADER	1
4	SC896	WALL JAMB	2
5	SC556	TRACK	1
6**	SCV190-67	SILENCER TUB TRACK, VINYL	1
	PPDLX51SV	PARTS PACK	
7	SC4106	PLASTIC WALL PLUG	6
8	SCR10	#8 x 1-1/2" TRUSS HEAD SCREW	6
9	SC4012	NYLON SPACERS	4
10	SC4082	ROLLER	4
11	SCR44	ROLLER SCREW	4
12	SC4125	T-BAR BRACKET	4
13	SC4130	TRIM RING	4
14	SCR07	#10 x 7/8” TRUSS HEAD SCREW	2
15	SCR08	#10 x 1-1/8” FLAT HEAD SCREW	2
16	SC4532	DECAL	2
17	SC4110	FINGER PULL	2
18	SC8950	BOTTOM GUIDE	1
19	SCR11	#6 x 3/8" TRUSS HEAD SCREW	1
20	SC4011	BUMPER INSERT	2
21	SC4020	BUMPER	2
	HARDWARE		
22	SC805	TOWEL BAR	2

** Part is not shown

If installing on a fiberglass unit you may need to snip outside corner to match corners on wall jambs and tub tracks to match radius on fiberglass unit

Exploded View— 3/16” 1100 Series Bypass Slider

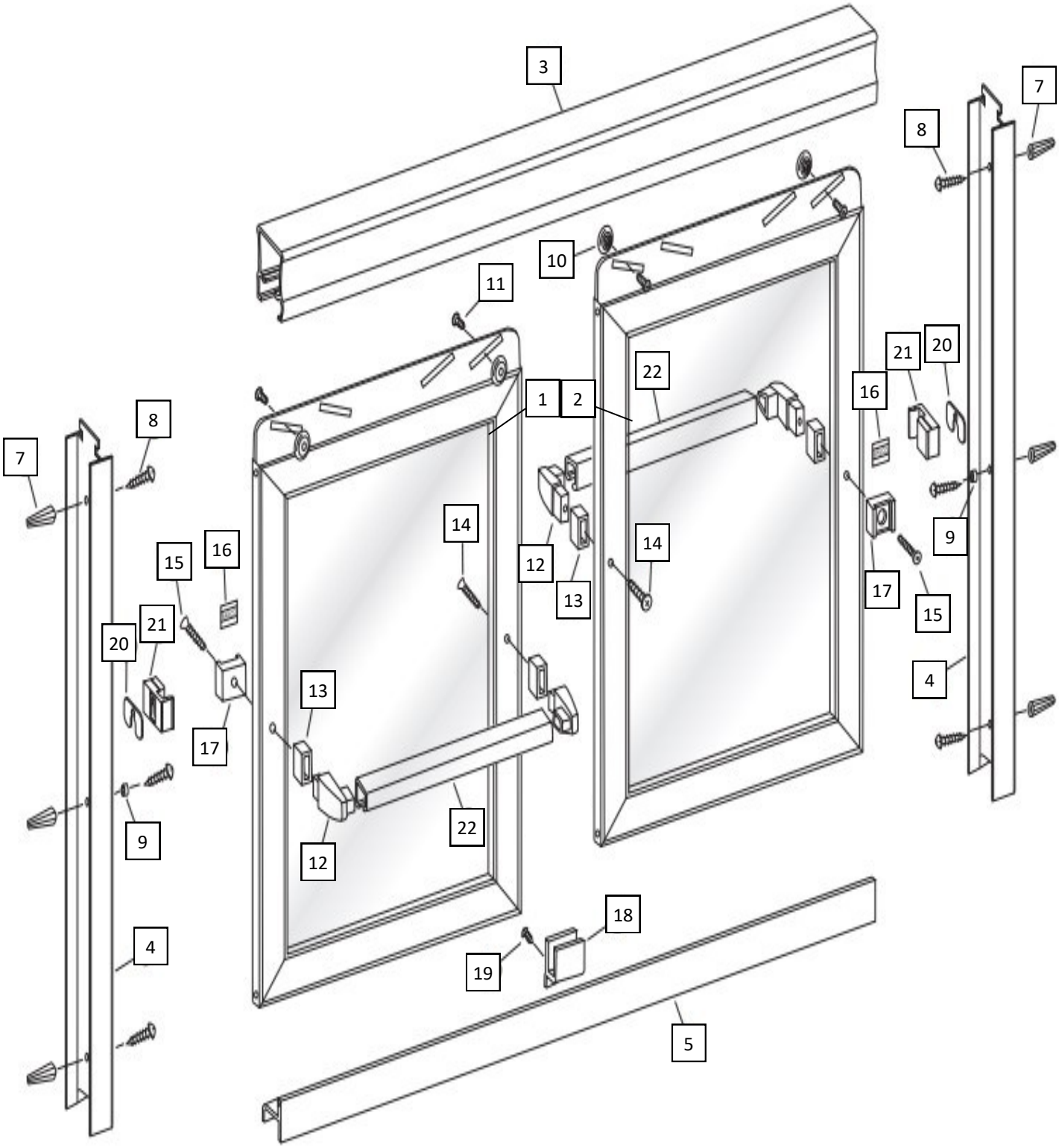

1 Determine location of the unit centerline on the threshold.

Mark a continuous centerline on both walls starting where the threshold centerline meets the wall. Use a level to ensure the wall centerline is plumb and straight. The wall centerline should be a minimum of the unit height from the threshold.

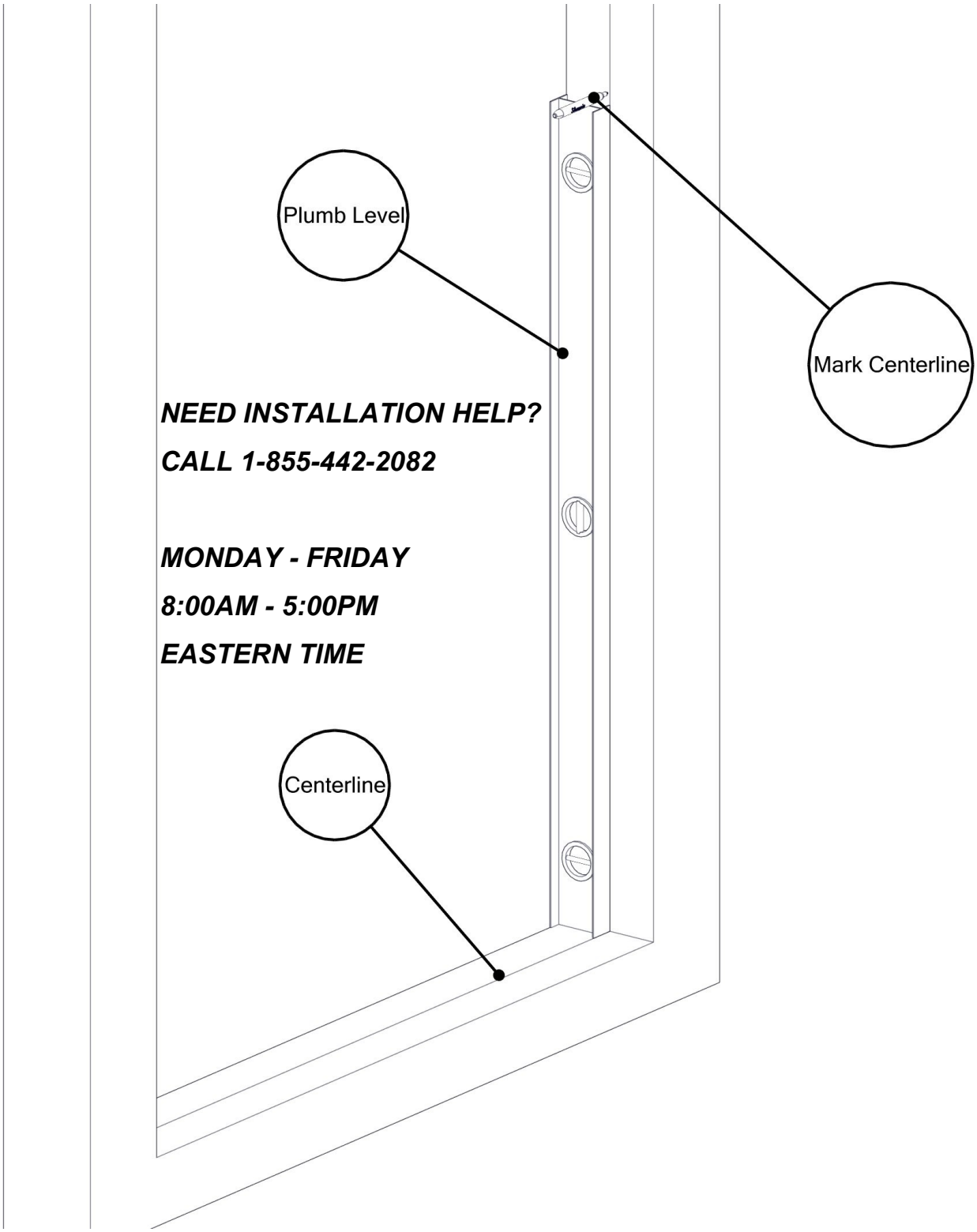

2 Measure the wall-to-wall opening at the center of the threshold. Cut the **Track (SC556)** 1/16” short of this dimension.

Center the **Track** on the centerline of the threshold.

Verify that the **Silencer Track Vinyl (SCV190-67)** is present in the slot on the **Track**.
Verify that the orientation of the track has the lip facing the outside of the threshold.

*If necessary, file a radius on the ends of the **Track** and **Wall Jambs** to match the corners of the enclosure.*

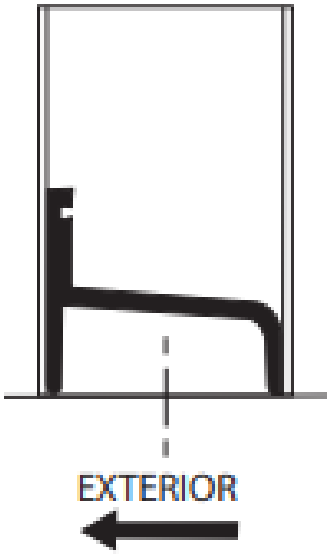

---

3 Press both **Wall Jambs (SC896)** into position over the **Track**. Masking tape can be used to hold the parts in place temporarily.

Use a level to plumb both **Wall Jambs**. Lightly mark along both sides of the **Track** and the holes in the **Wall Jambs** with a pencil, then remove all parts.

For tile or marble walls, drill six 3/16” diameter holes and insert the **Plastic Wall Plugs (SC4106)**. A center punch helps locate the holes accurately.

Attachments to fiberglass or acrylic units can be made in two ways. If a reinforcement is built into the wall of the unit, drill six 1/8” diameter holes and install the **Wall Jamb Screws (SCR10)** directly into the reinforcement. If the wall are not reinforced, drill 3/16” holes and install the **Plastic Wall Plugs**.

CAUTION: The Track should never be screwed to the threshold.

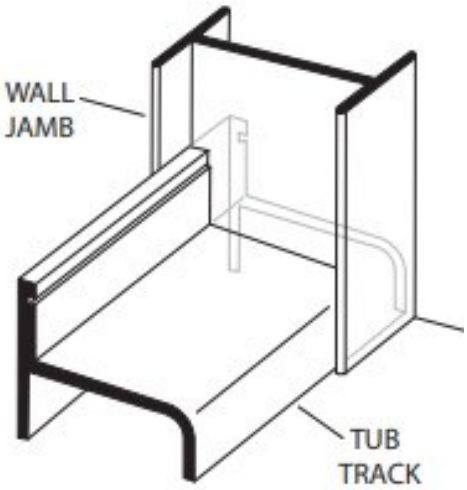

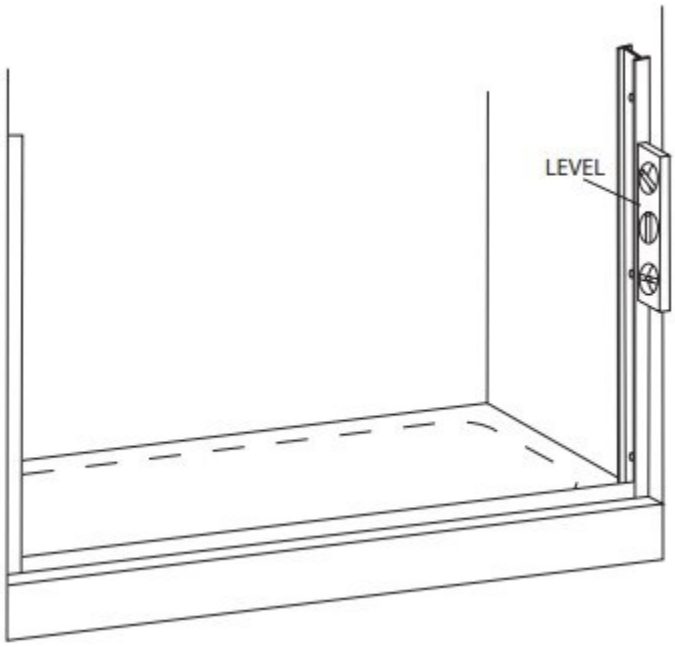

4 Before replacing the **Track**, force a slight downward bow in the extrusion. This will ensure the track fits tight to the threshold.

Run two beads of caulk inside the penciled marks on the threshold. Place the **Track** in the exact position marked in Step #3 and seat it firmly in the caulking.

NOTE: Improper caulking will result in leaks.

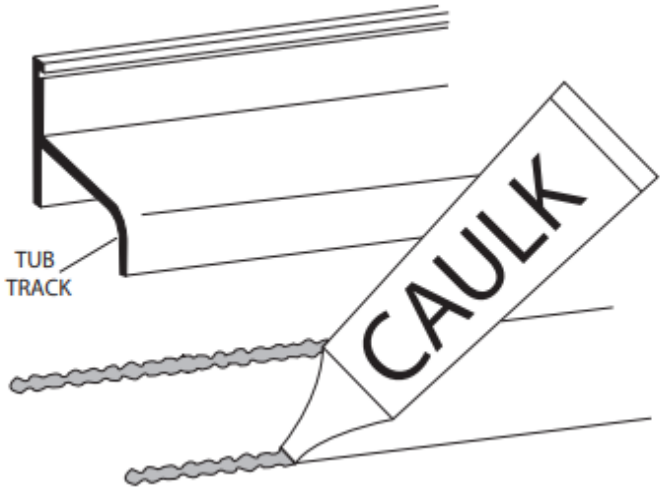

---

5 Replace one **Wall Jamb** and attach to the wall with a **Wall Jamb Screw** through the center hole. Slip a **Nylon Spacer (SC4012)** over a **Wall Jamb Screw** and install it in the top hole.

Repeat for the bottom hole.

Verify that the **Wall Jamb** is still plumb and the screws are tightened.

NOTE: Do not over tighten the screws to avoid damaging the spacers.

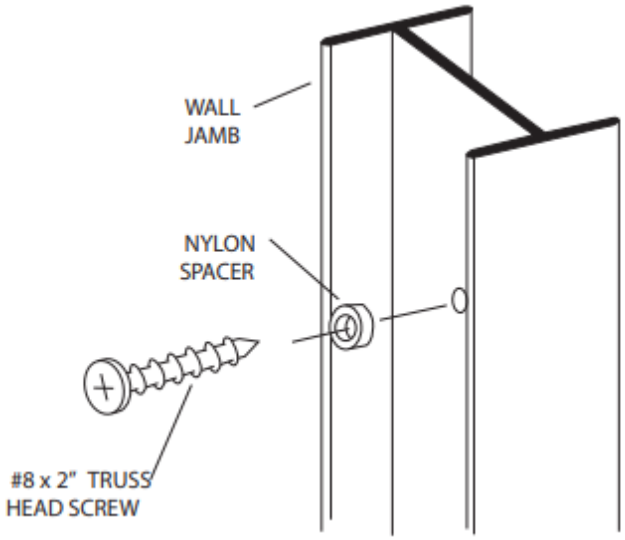

---

6 This bath enclosure is equipped with safety tee-lock **Wall Jambs**. When installed properly, the header is permanently locked to the **Wall Jambs** and cannot be accidentally dislodged.

Slide the safety tee-lock of the unmounted **Wall Jamb** into the **Header (SC884)**.

Holding the header at an angle, engage the end onto the mounted **Wall Jamb**.

Pivot the **Header** into place, then slide the loose **Wall Jamb** to the wall and press into position on the threshold.

Attach to the wall per instructions in Step #5.

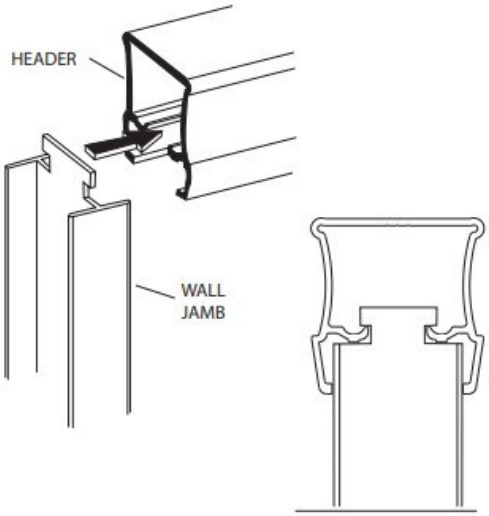

7 Install the **Roller (SC4082)** and the **Roller Screw (SCR44)** on the outside slots of the top rails.

On the **Outer Panel**, the **Roller** is installed facing the outside. On the **Inner Panel**, the **Roller** is installed facing the inside.

Textured glass should be installed with the textured surface facing the outside. Clear glass does not have a preferred side to face out. If your unit has **Redi Clear®**, be sure to install each panel with the treated surfaces facing the inside.

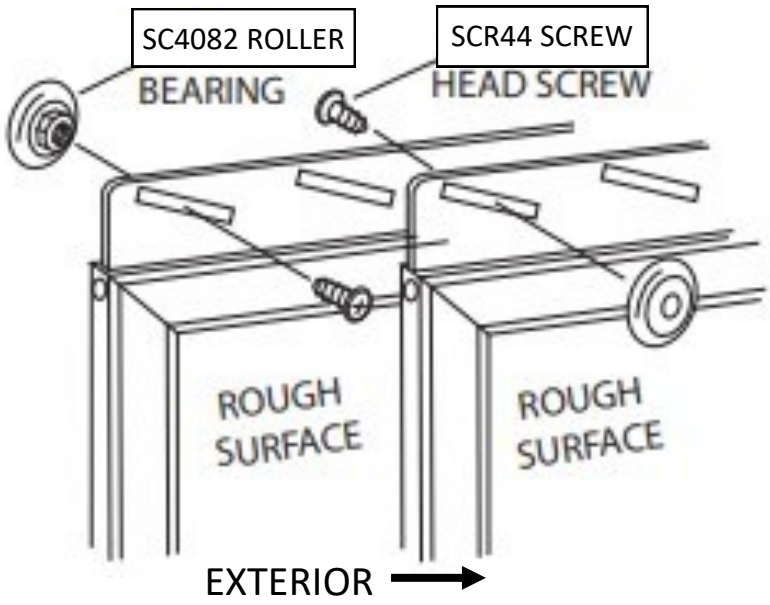

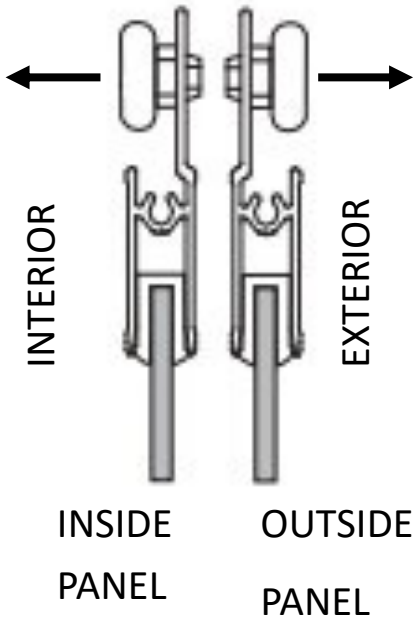

---

8 Lift the **Inner Panel** into position with the **Rollers** engaging the groove in the **Header**. Repeat for the **Outer Panel**.

If Panels are not parallel to their respective **Wall Jambs**, remove and adjust the **Rollers** up or down in their slots to compensate.

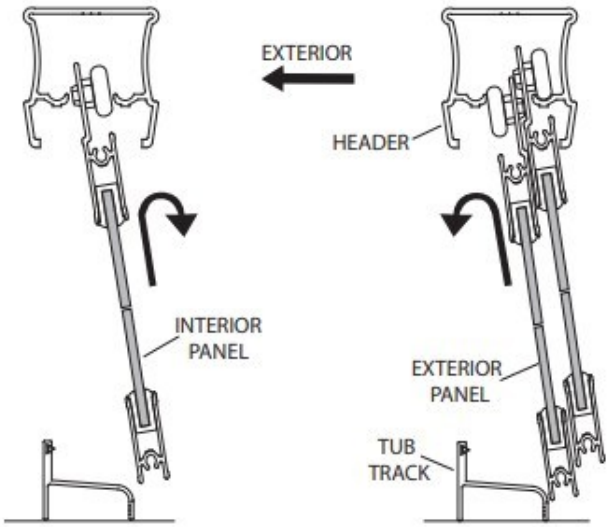

9 Before installing the door panels, the proper orientation should be determined.

For maximum waterproofing, the interior panel should always be positioned closest to the shower head.

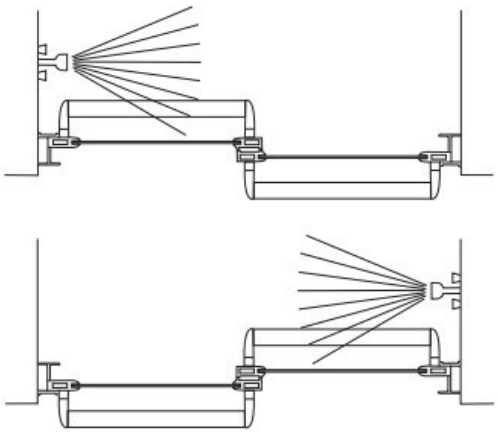

---

10 Slide the four **Trim Rings (SC4130)** over the **T-Bar Brackets (SC4125)**.

Press the **T-Bar Brackets** into the ends of the two **Towel Bars (SC805)** to form two **Towel Bar Assemblies**.

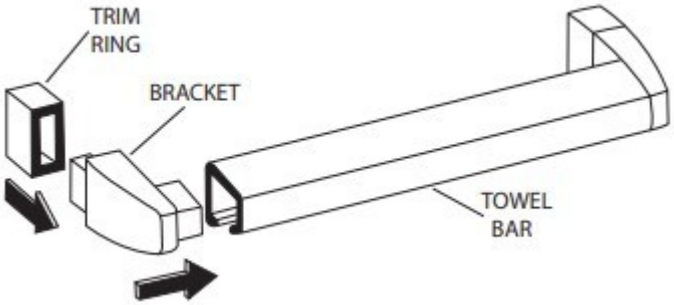

---

11 Attach the **Towel Bar Assembly**, with the open slot of the bar facing down, to the inside of the **Inner Panel** using a **Towel Bar Screw (SCR07)** through the hole in the side of the rail that is closest to the center of the opening. Then use a **Finger Pull Screw (SCR08)** through the **Finger Pull (SC4110)** and through the hole that is closest to the wall.

NOTE: Do not use a power tool to tighten the screws. Do not overtighten the screws to avoid stripping the acrylic threads or cracking the acrylic bracket.

Peel the backing from the **Decal (SC4532)** and press it into the recess of the **Finger Pull**.

*Repeat the above steps, but from the interior, for the **Outer Panel**.*

CAUTION

Installing the towel bar side facing toward the other panel will lead to breaking 1 or both pieces of glass.

Be sure to install the towel bar side facing away from the other panel!

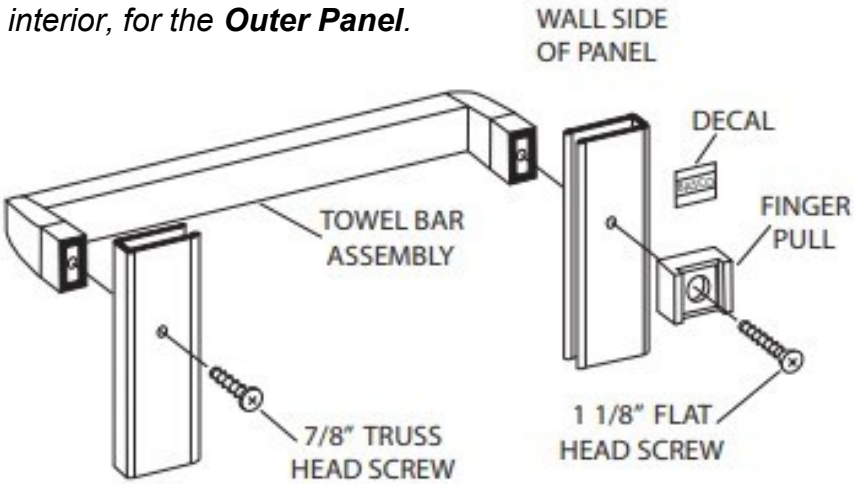

12 Locate the **Bottom Guide (SC8950)** in the middle of the **Track** with both glass panels slid to one side.

Use a 1/8” drill bit to drill into the “V” groove on the **Track** using the mounting hole on the **Bottom Guide**.

Install the **Bottom Guide** to the **Track** with the **Guide Screw (SCR11)** thru the drilled hole.

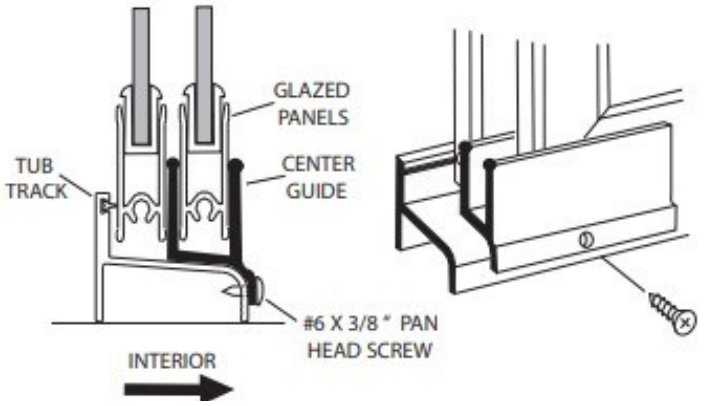

---

13 Slide the two **Bumper Inserts (SC4011)** into the two **Bumpers (SC4020)**. Align the slots in the **Bumpers** with the glass panels.

Snap the **Bumpers** downward over the top and bottom **Wall Jamb Screws** with the **Nylon Spacers**.

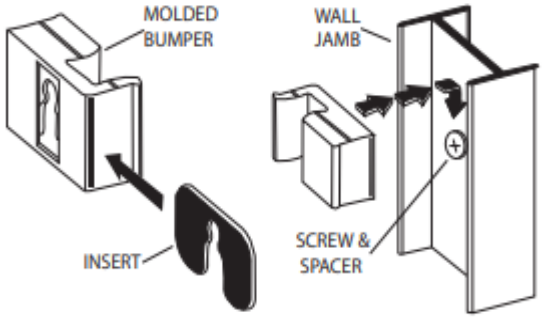

---

14 Apply a small bead of silicone on each end of the **Track** where it meets the **Wall Jambs** and the interior edge of the **Wall Jambs**.

Run a bead of silicone along the interior edge of the **Track**.
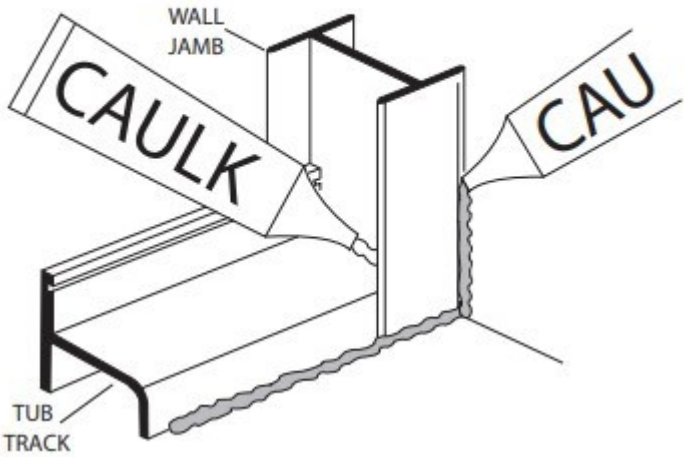
NOTE: DO NOT USE the shower until the silicone is completely cured. Check the tube of silicone for the manufacturer recommended cure time (typically 24 - 48 hours).