3000 Series Frameless Adjustable Door

3/8” Glass

INSTALLATION INSTRUCTIONS

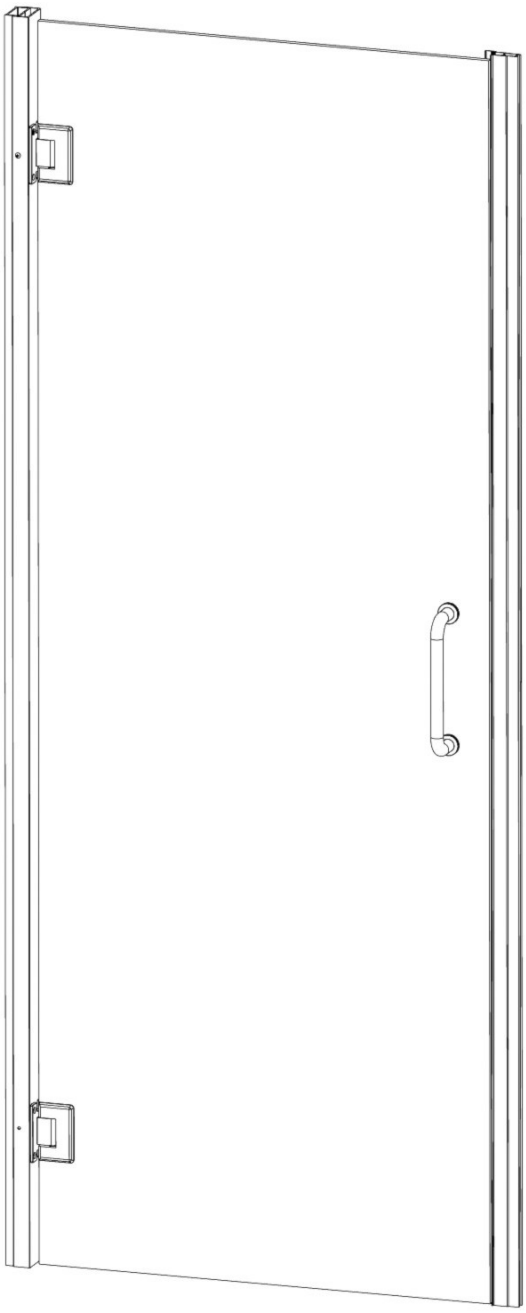

Tools:

To install your new Shower Enclosure, you may need the following:

- Pencil
- Low Tack Tape
- Tape Measure
- 2', & 4' Levels
- #2 Phillips Screwdriver
- Drill
- 1/8", 5/32", 3/16", 5/16" Metal Drill Bits
- 3/16" or 5/16" Masonry bit may be required in some installations
- Center Punch
- Files
- Hack Saw
- Caulk Gun
- Clear Silicone Caulk
- Suction Cups
- 7/16" shims

Safety Notes:

- This unit is best installed by two people.
- Handle the glass panels carefully and protect the edges. Safety tempered glass is very resistant to breakage, but the sharp corners of the panels can damage tile, flooring surfaces, and easily damaged at the corners.
- The glass can break if unequal pressure is applied during installation.
- Please wear safety glasses whenever drilling or cutting. When drilling holes in ceramic tile or marble, use a center punch and hammer to carefully break the glazed surface to prevent skidding when drilling.

NOTE: Tempered glass cannot be cut.

Installation Notes:

- This unit may be installed on a walls without proper blocking, including fiberglass and acrylic walls. Proper use of the described anchors and silicone is required.
- If blocking is available for installation, DO NOT use wall inserts. Screw directly into the wooden blocking.
- U-channel may be installed using wall plugs where no backing is found.
- Use caution to not pierce plumbing or electric lines while installing door hardware.
- Cover the drain with tape prior to installation to prevent loss of small parts.
- Unpack your unit carefully and inspect for freight damage. Lay out and identify all parts using the instruction sheet as a reference. Before discarding the carton, check to see that no small hardware parts have fallen to the bottom of the box. If any parts are damaged or missing, refer to the description noted in the instructions when contacting your dealer for replacements.

Maintenance:

Two primary materials are used to manufacture your new shower enclosure: tempered glass and anodized aluminum. To assure a long lasting finish on the enclosure, wipe it down with a towel after each use.

For occasional, more concentrated cleaning efforts, we find that **Lysol® Non-Abrasive Bathroom Cleaner** works extremely well. Be sure that any over spray falling on the aluminum frame is rinsed thoroughly and dried. Many over-the-counter cleaners, if applied to the aluminum and left on, will harm the metal finish and cause permanent damage even though their directions indicate safe use on shower doors. Never use a scouring agent to clean the aluminum.

For units with ***Redi Clear®*** recommends the use of ***Maintain Spray*** on the glass. Please contact customer service for details.

Orientation Note:

This unit is completely reversible and may be installed hinge-right or hinge-left. Refer to the illustration to determine the best position of the hinge for your installation. For maximum water proofing, the hinge jamb should always be opposite the shower head.

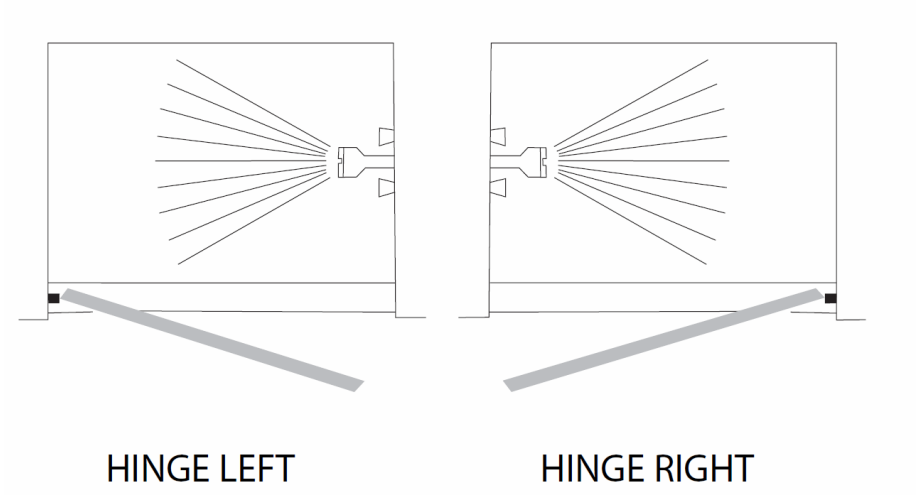

CAUTION: For safety purposes, the door MUST ALWAYS open outward.

Parts List— 3/8” 3000 Series Adjustable Door

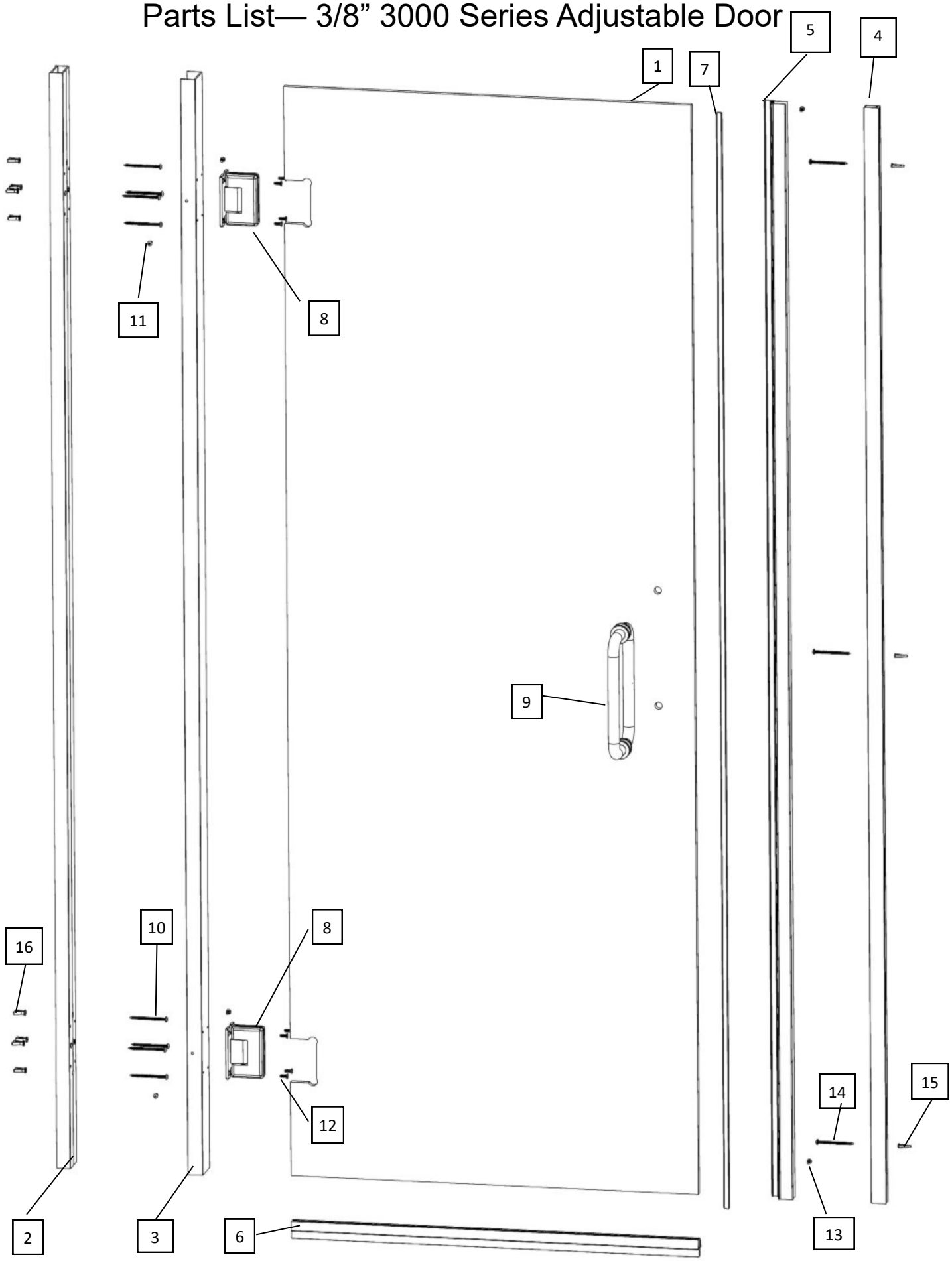

Exploded View— 3/8” 3000 Series Adjustable Door

ITEM NO.	Part #	DESCRIPTION	QTY
1		GLASS DOOR	1
2	SC982	Hinge Jamb	1
3	SC983	Adjustable Hinge Jamb	1
4	SC508	Wall Jamb	1
5	SC552	Adjustable Strike Jamb	1
6	SCV920	Drip Vinyl	1
7	SCV266	Strike Vinyl	1
8	HG1J	Wall Mount Hinge	2
9	PU1D	Back to Back Pull	1
	PPHVY03XX	Heavy Adjustable Unit Parts Pack	1
10	SCR10	#8 x 1 1/2” Truss Head Screw	10
11	SCR28	#8 x 1/2” Threading Truss Head Screw	6
12	SCR29	#8 x 1/2” Threading Flat Head Screw	8
13	SCR24	#6 x 3/8” Self Tapping Screw	2
14	SCR09	#8 x 1 1/2” Flat Head Screw	8
15	SC4106	Blue Wall Anchor	8
16	TA Anchor	TA Wall Anchors	8
-	TKRED	Wall Anchor Key	1
-		Alcohol Pad	3
-		1/16” Setting Blocks	8
-		1/8” Setting Blocks	8
-		1/4” Setting Blocks	2

Note: You will not use every part in the Parts Pack. Some extra hardware is provided for your convenience. The PartPack is used on multiple style doors which may use other parts than required for your installation.

1 Lightly mark a continuous unit centerline on the threshold.
Next, mark a continuous unit centerline up each wall, starting where the threshold centerline meets the wall. Use a level to ensure the wall centerline is plumb and straight. The wall centerlines should be a minimum of the unit height from the threshold.

Note: It is extremely important the unit centerline be continuous and straight to ensure proper installation.

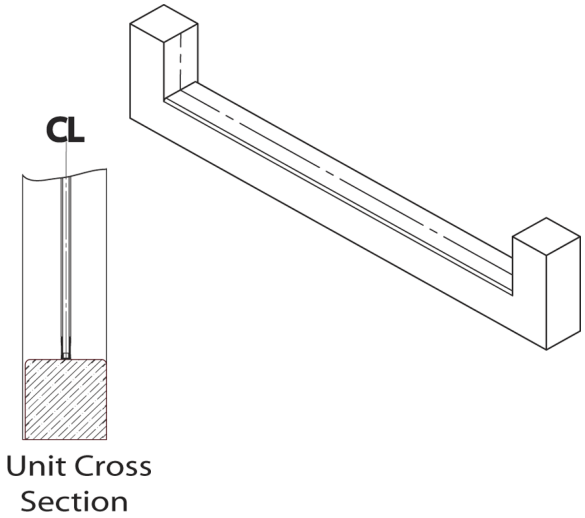

Centerline (CL) is a term used to describe the center or mid-point of the unit. The most common unit centerline position is the middle of the threshold. CL is marked in when visible in images.

---

2 On the wall selected for installation of the door, check the fit of **SC982 Hinge Jamb [2]** where the threshold and wall meet. In many cases the corner will need to be contoured to fit a radius. Contour the corner as required to ensure proper contact with the wall and threshold.

Proper fit in this area allows the door to be installed on a fiberglass enclosure or walls with no blocking. Failure to radius the corner for proper fit may cause the door to fall causing property damage and bodily harm.

Note: It is imperative that SC982 rest on the threshold. Out-of-Level conditions may dictate the door and SC983 jamb assembly be raised such that SC983 does not contact the threshold. This installation is permitted, but is to be avoided if possible.

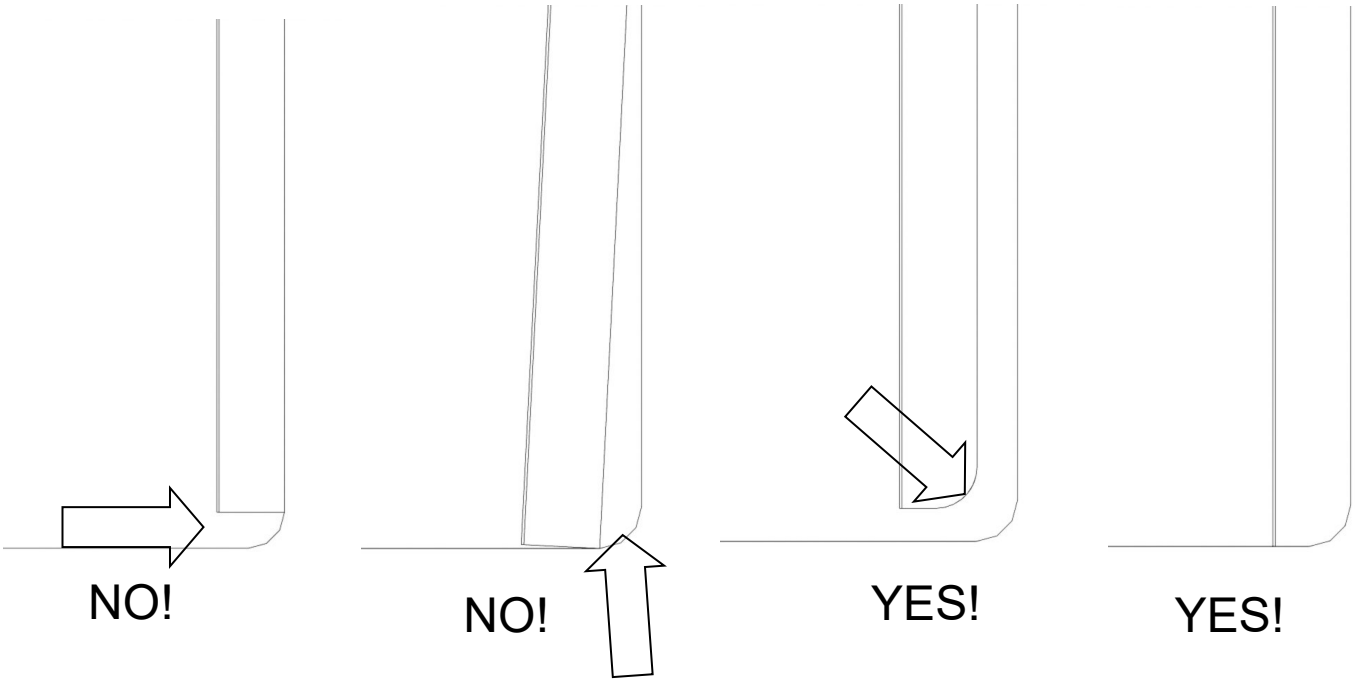

3 Place the **SC982 Wall Jamb [2]** on the wall. Using a level, line the center of the wall jamb up with the centerline marked in step 1 and make it plumb. Mark the 8 holes (4 at each hinge) on the wall for securing.

The centerline should run through the center holes.

NOTE: The customer may move the location of the mounting screws up or down 3”. The customer is responsible for drilling new holes at the required location. All 4 holes are required to be used. The diamond pattern is also required.

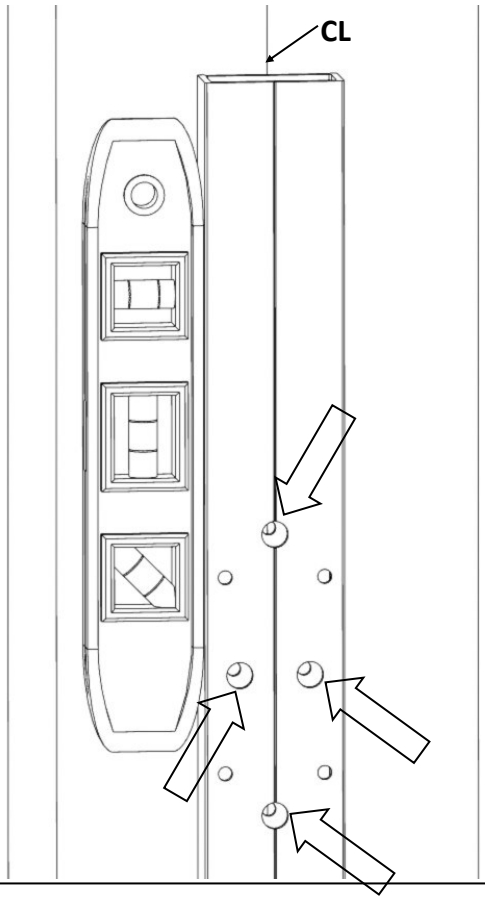

4 Remove the **Wall Jamb [2]** and drill holes for mounting screws as required. See ***Table 1*** for drilling details.

Table 1 - Mounting Hole Drilling Requirements

	Wall Material		
	Any	Fiberglass	Tile/Other
Blocking Available In Wall	YES	NO	NO
Finish Material Drill Diameter	3/16"	5/16"	5/16"
Blocking Drill Diameter	1/8"	Not Applicable	Not Applicable
Insert Required	NONE	Included	Customer Provided[1]
Total Wall Thickness	All[2]	¼" or less	Over ¼" [2]

1) Included are the required Toggler® brand wall plugs for installation on a fiberglass or acrylic shower unit. If your installation surface is different the customer maybe required to provide your own mounting hardware. Use only Toggler® brand wall plugs. Find the part number required for your wall thickness in ***Table 2***. These are available for purchase at Lowe’s® and Menards®.
2) If finished wall material is over 3/4” the customer will be required to provide their own mounting screw. It is recommended #8x3” stainless steel truss head screws for finished wall material over 3/4”.
3) If wall material thickness is between thicknesses and require inserts use the insert for the thinner size

Table 2 - Wall Inserts

Wall Thickness[3]	Part Number			
	Toggler®		Lowe's®	Menards®
1/8" to 1/4"	TA	50275	*INCLUDED*	
3/8" to 1/2"	TB	50300	114767	2344078
5/8" to 3/4"	TC	50325	114823	2344065

5 IF WALL ANCHORS ARE REQUIRED FOR INSTALLATION

Drill 5/16” diameter holes at each marked location.

Install 1 TOGGLER® per hole following the manufacturers’ installation instructions.

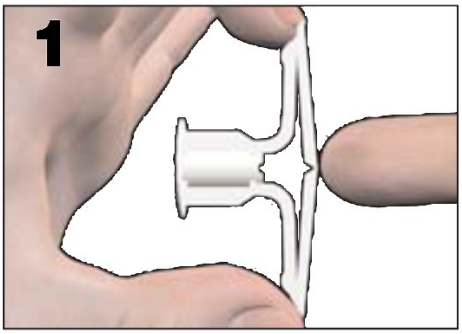

Fold anchor in middle

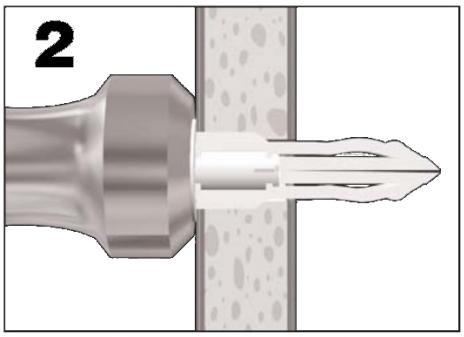

Insert anchor in hole and tap flush

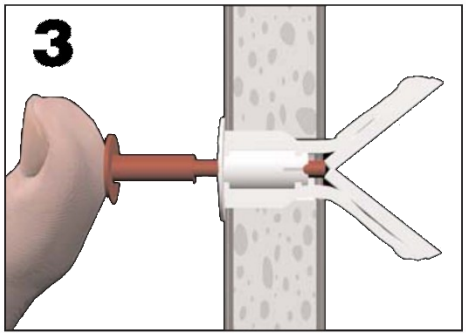

Insert key to pop anchor open in wall.

Do not hammer key.

Remove key.

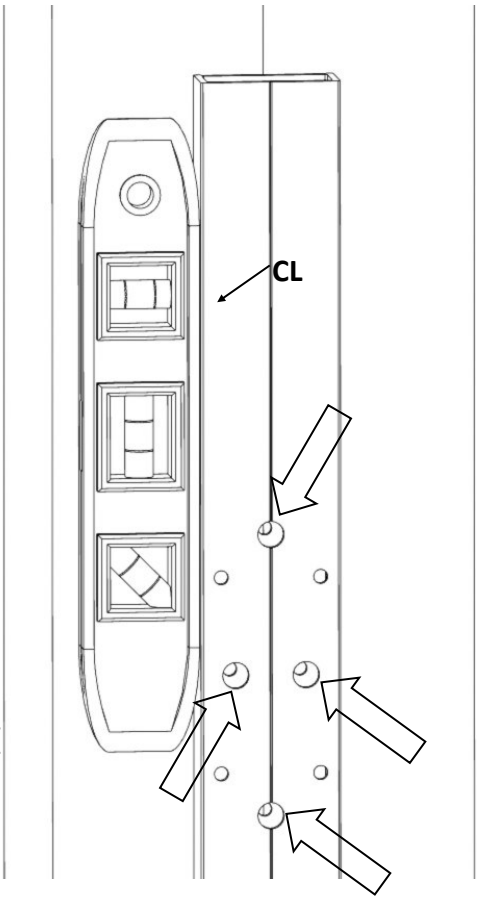

6 IF BLOCKING IS AVAILABLE IN THE WALL

At each marked location, drill a 3/16” clearance hole through the finished wall material **only.**

Drill a 1/8” diameter pilot hole 1” deep into the blocking at the marked locations.

7 Using alcohol swabs from the Parts Pack, thoroughly clean and dry the area of the wall where jamb will be installed on. Also clean and dry the back of the **Wall Jamb [2]**

Apply a continuous 3/16” to 1/4” bead of silicone inside each leg of the **Wall Jamb [2]** where it meets the wall. The silicone should protrude past the leg it will contact the wall and spread out when **Wall Jamb [2]** is secured in place.

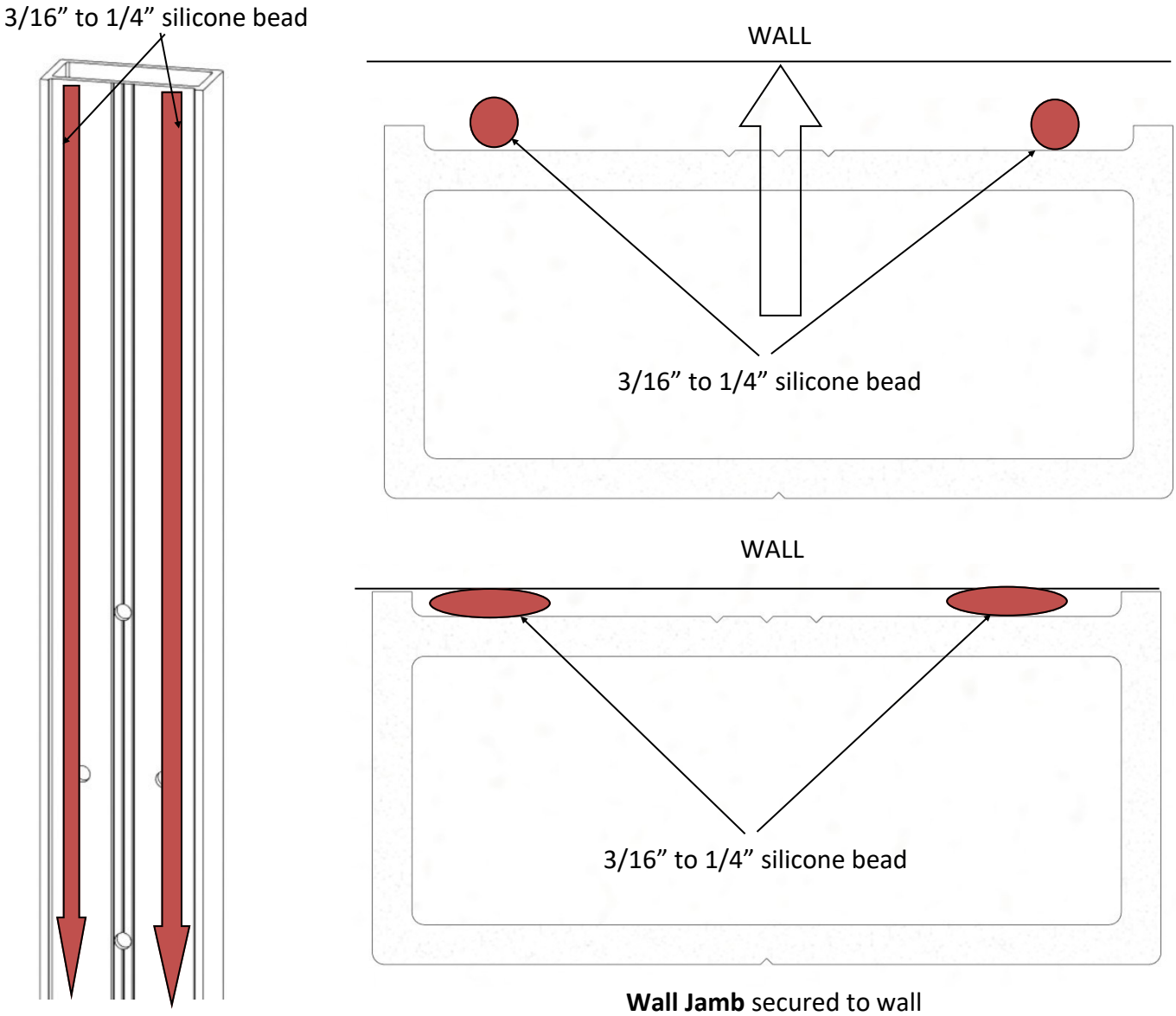

Wall Jamb secured to wall

8 Place a small amount of silicone in each screw hole.

Use a level again to make sure the wall jamb in installed plumb and in its final position.

Using, **#8 Truss Head Screw [10]** secure the **SC982 Wall Jamb [3]** to the wall.

If using power tools to install screws: Use caution so as to not strip the insert or backing, as applicable.

Clean up any visible silicone before it dries.

9 On the wall selected for installation of the strike jamb, check the fit of **SC508 and SC552 [4,5]** where the threshold and wall meet. In many cases the corner will need to be contoured to fit a radius.

Contour the corner as required to ensure proper contact with the wall and threshold.

Proper fit in this area allows the door to be installed on a fiberglass enclosure.

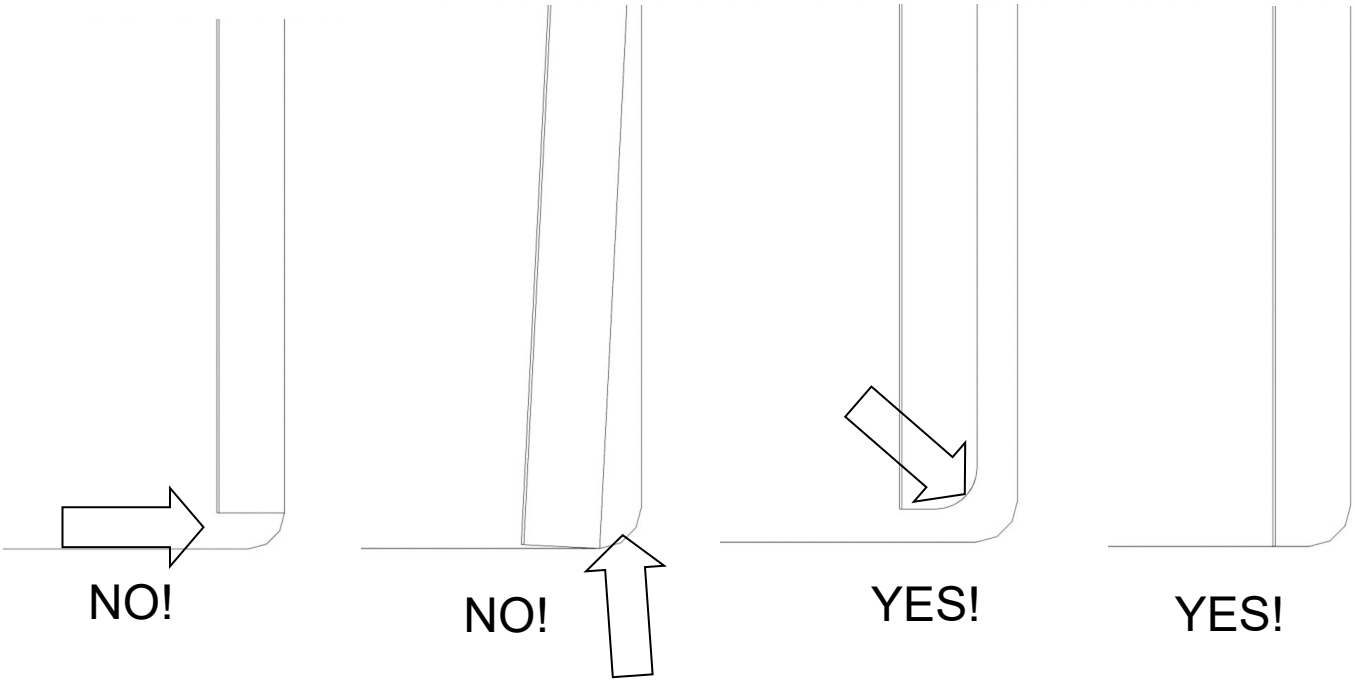

10 Drill 3 3/16” diameter holes along the centerline of the **SC508 Wall Jamb [4]**.

Place 1 hole in the center and 1 hole 4” from each end.

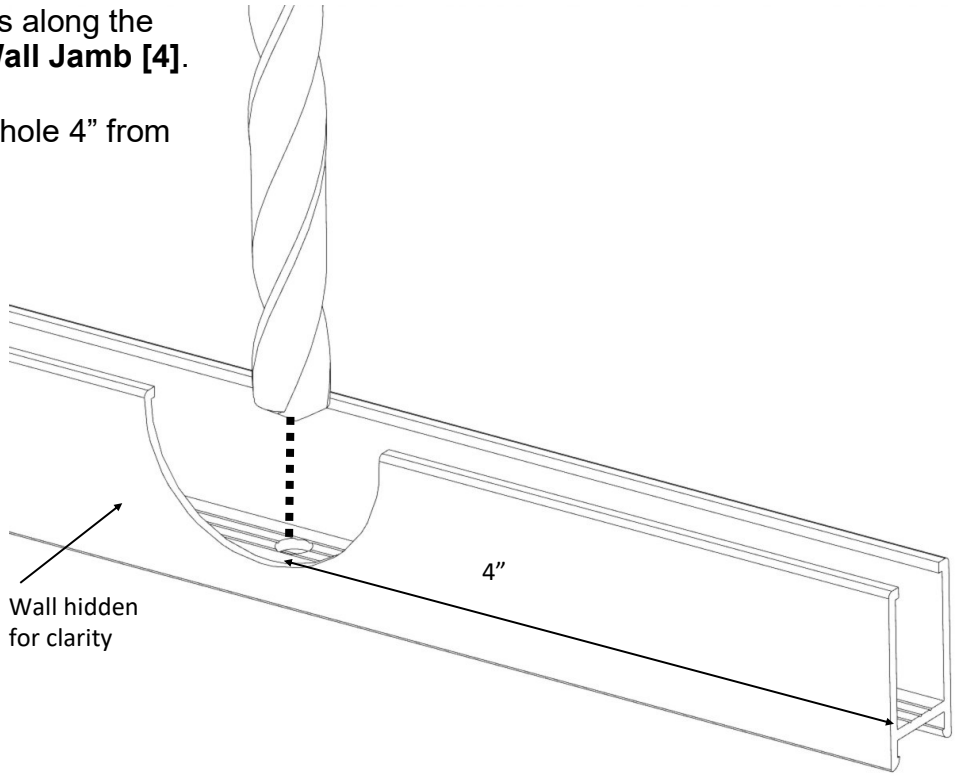

11 Align the **Wall Jamb [4]** along the centerline marked up the strike side wall.

Use a level to ensure the wall jamb is plumb.

Mark the hole locations on the wall.

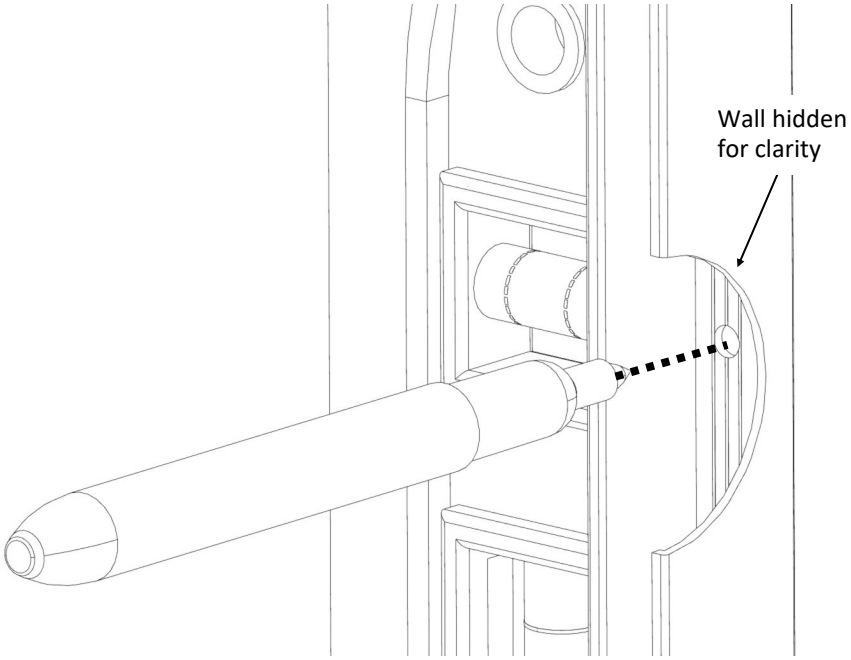

12 Remove the jamb from the wall. At each marked location, drill for installation of the jamb. Use ***Table 3*** to determine hole size and installation method for the strike jamb

Table 3 - Mounting Hole Drilling Requirements

	Wall Material		
	Fiberglass or Acrylic	Fiberglass or Acrylic	Tile/Other
Reinforced Walls	YES	NO	-
Drill Diameter	1/8"	1/8"	3/16"
Insert Required	NO	No	Yes, Blue Insert

13 Insert a small amount of silicone into each drilled hole.

If applicable, insert a blue wall plug into the hole. Carefully cut the head flush with the wall using a razor blade.

Position the U-channel and secure with **#8 Flat Head Screws [14]**.

Use caution so as to not strip the inserts or fiberglass wall material!

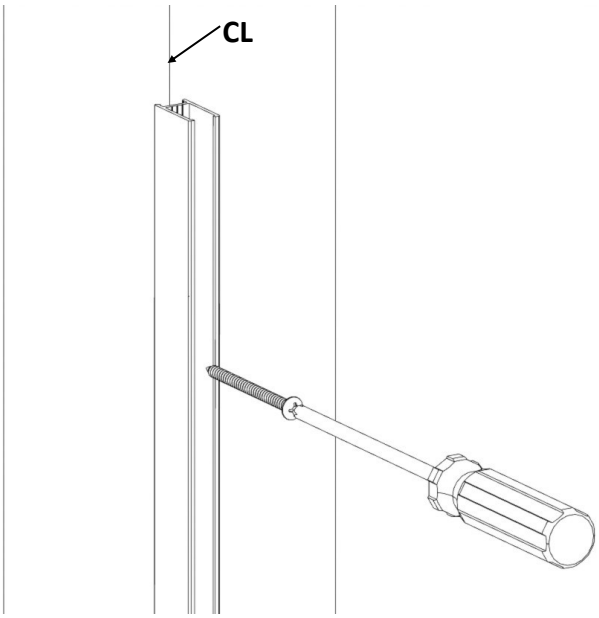

14 Using alcohol pads from the Parts Pack, wipe down the hinge notches and notch gasket areas on the **Door Panel Glass [1]**. Allow glass to dry before continuing.

Remove the back plates from both **HG1J Hinges [8]**.

Place a thick gasket on the **Hinge [8]** and place the fixed part of hinge onto the outside of the **Door Glass [1]**.

Next, place another thick gasket against the inside of the glass and attach the back plate with the screws provided. The interior of hinges must press firmly against top side of notch.

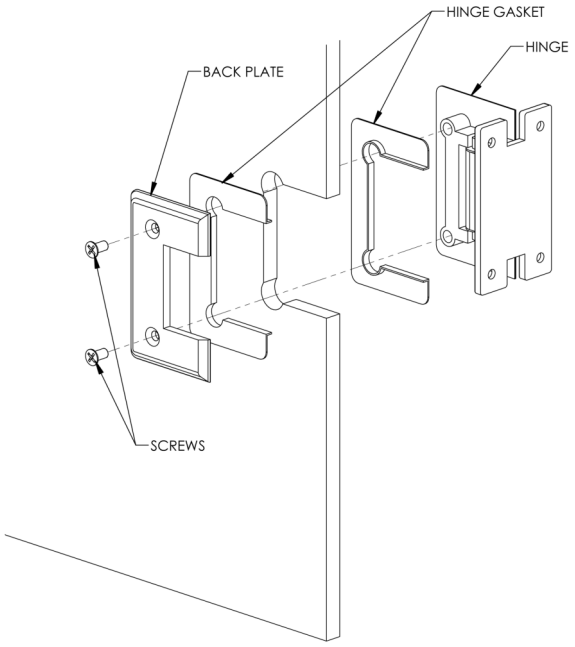

As viewed from inside of shower

---

15 Using a screw driver, use 8 **hinge mounting screws [12]** to attach both **HG1J Hinges [8]** to **SC982 Adjustable Jamb [3].**

Hinge Mounting Screw [12] are self threading screws. The mounting holes, while pre-drilled, are not tapped by the manufacturer. The screws will go in easily using a standard screw driver. If power tools are used to insert the screws, use caution so as to not strip the metal.

Loosen the screws from step 8 and adjust as required to achieve a 1/4” gap between the **Glass** and **Jamb**.
Be sure to tighten these screws again.

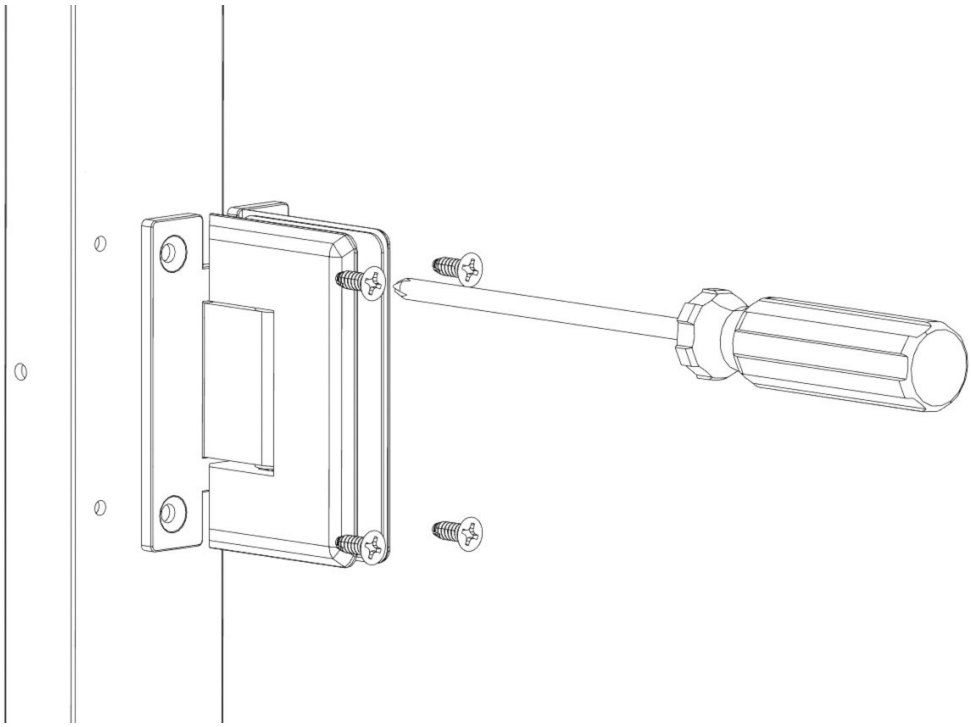

16 Place two 7/16” shims on the curb or threshold. These shims must remain in place throughout the installation process. You can stack setting blocks from the Parts Pack if required.

With the help of an assistant inside the shower, lift the **Door Glass Assemb**ly into the opening and set the panel on the shims. Slide the **Adjustable Wall Jamb [3]** over the **Hinge Wall Jamb [2]**.

Work together to make the door plumb and level, adding or removing shimming from under the door as required.

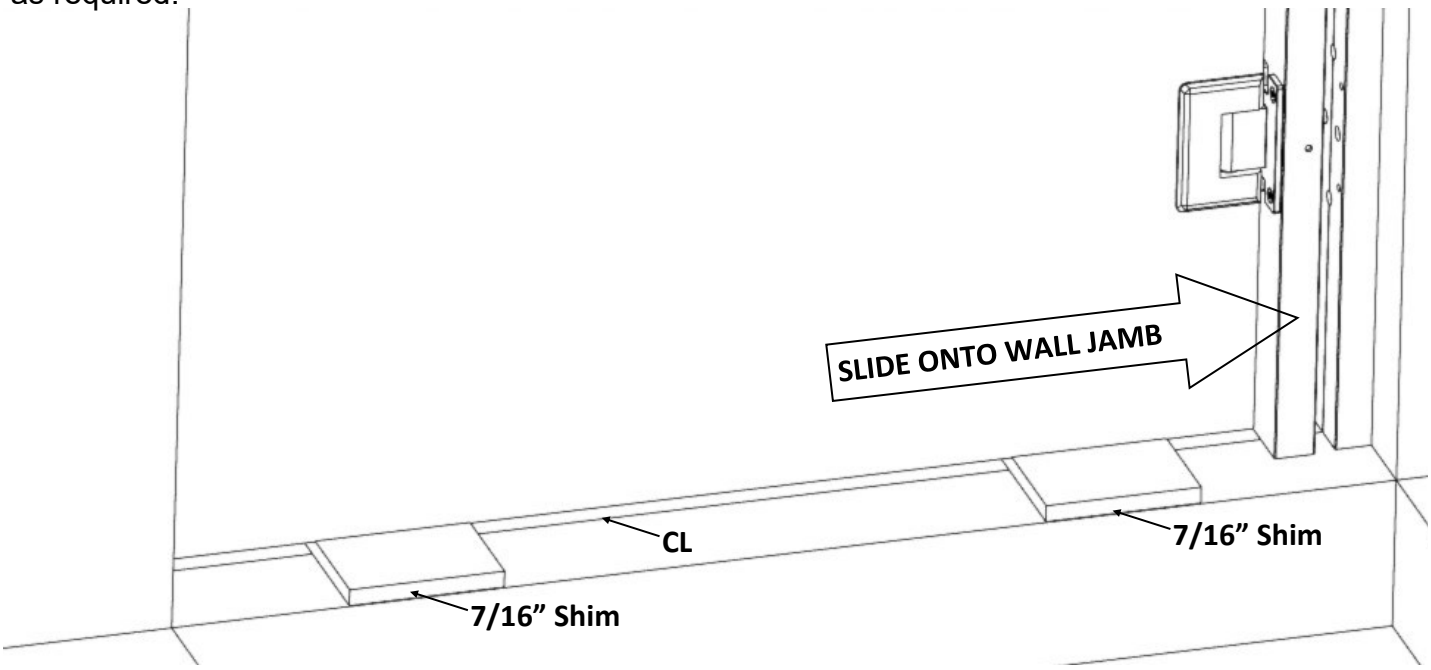

17 After the door is leveled, push or pull the door assembly as required to set the gap between the **Glass [1]** and the **Strike Wall Jamb [4]**. Check the top and bottom of the door for the gap. Set the gap at between 1/4” and 13/16”.

The strike and jambs allows for out of plumb adjustment in the wall as well as some width adjustment. The gap may not be consistent the entire unit height.

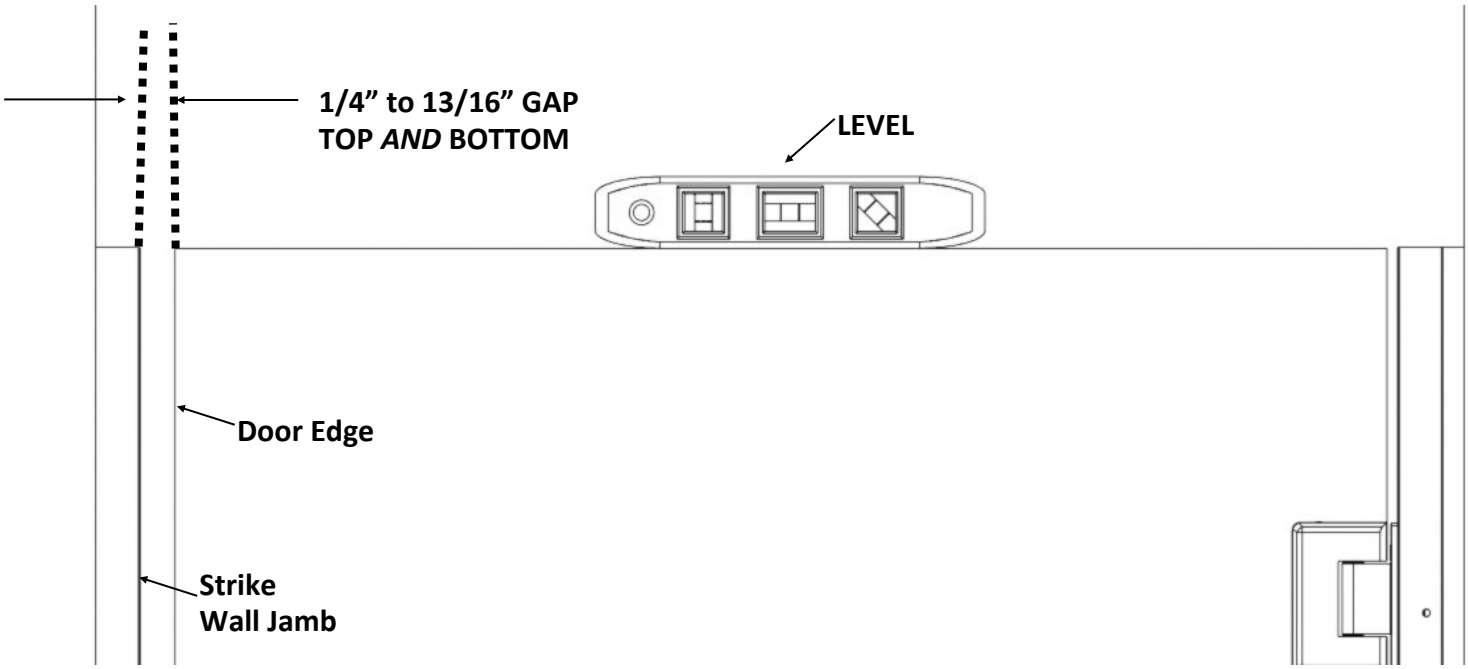

18 While keeping the door level, plumb, and with the correct gap at the strike side; drill 5/32” holes through the **SC982 Wall Jamb [2]** at the locations marked by the holes near each hinge in **SC983 Adjustable Jamb [3].** The holes are on the side of the jamb, both inside and outside of the shower.

DO NOT open the door until both Hinge Jamb Screws [11] are installed on the inside or outside of the shower. There is nothing securing the door to the wall until these screws are installed. The door WILL fall.

Once both screws are installed the door may be carefully temporarily opened to allow access to the other side of the door for installation of the Hinge Jamb Screws [11].

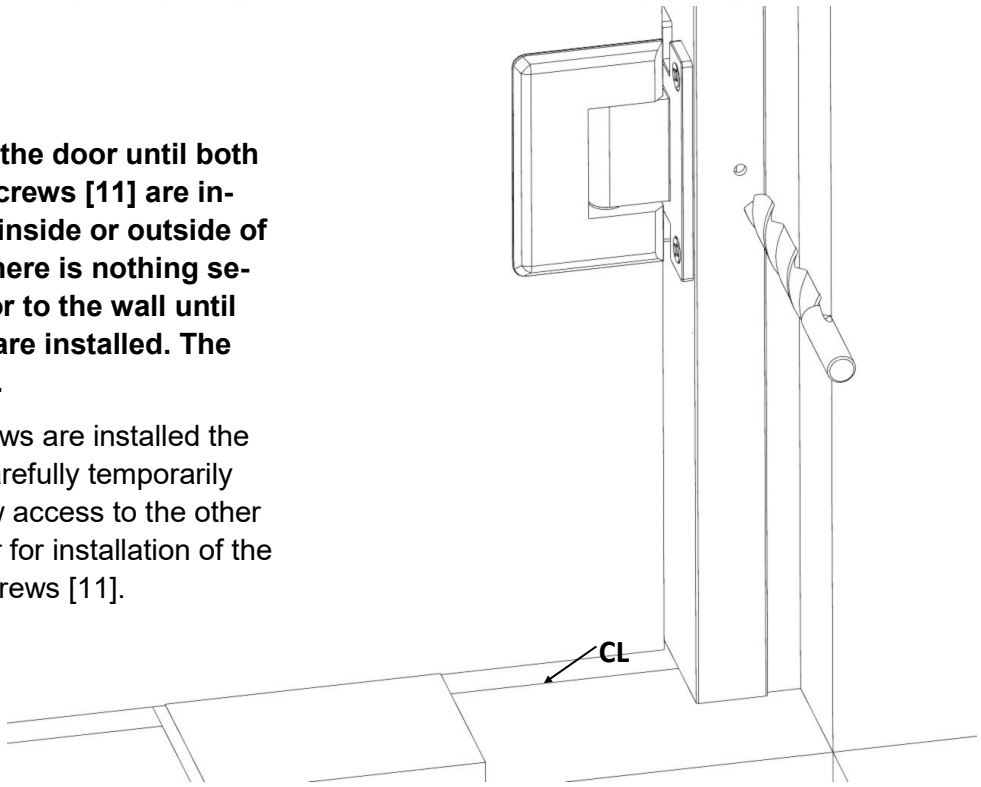

19 Insert **Hinge Jamb Screws [11]** into each hole drilled in step 18.

The screws will go in easily using a standard screw driver. If power tools are used to insert the screws, use caution so as to not strip the metal.

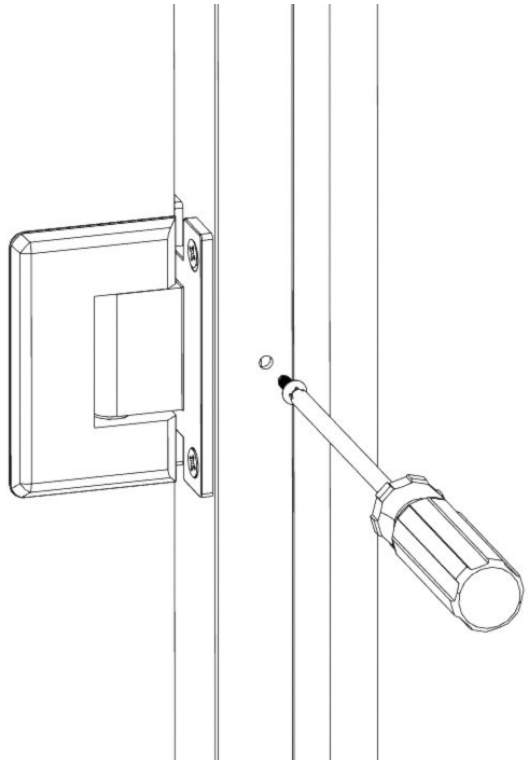

20 After all 4 **Hinge Jambs Screws** [**11**] are installed, remove the 7/16” shims and carefully open the door, making sure the glass does not contact anything.

Slowly open and close the door to ensure the hinges are in alignment and are operating smoothly.

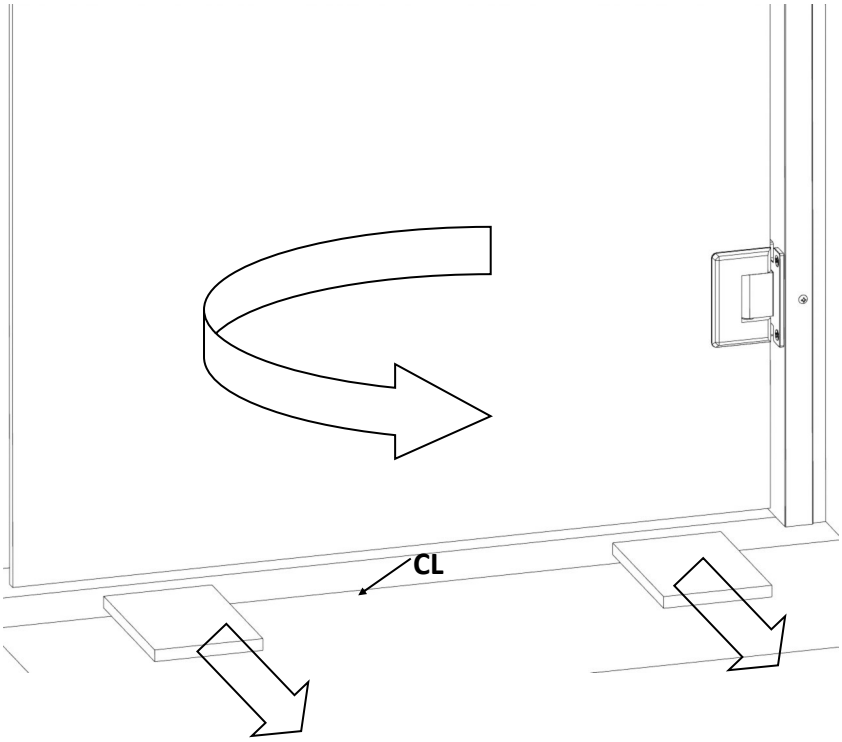

21 Slide the **SCV266 Strike Vinyl [7]** into the **Strike Jamb [5]**.

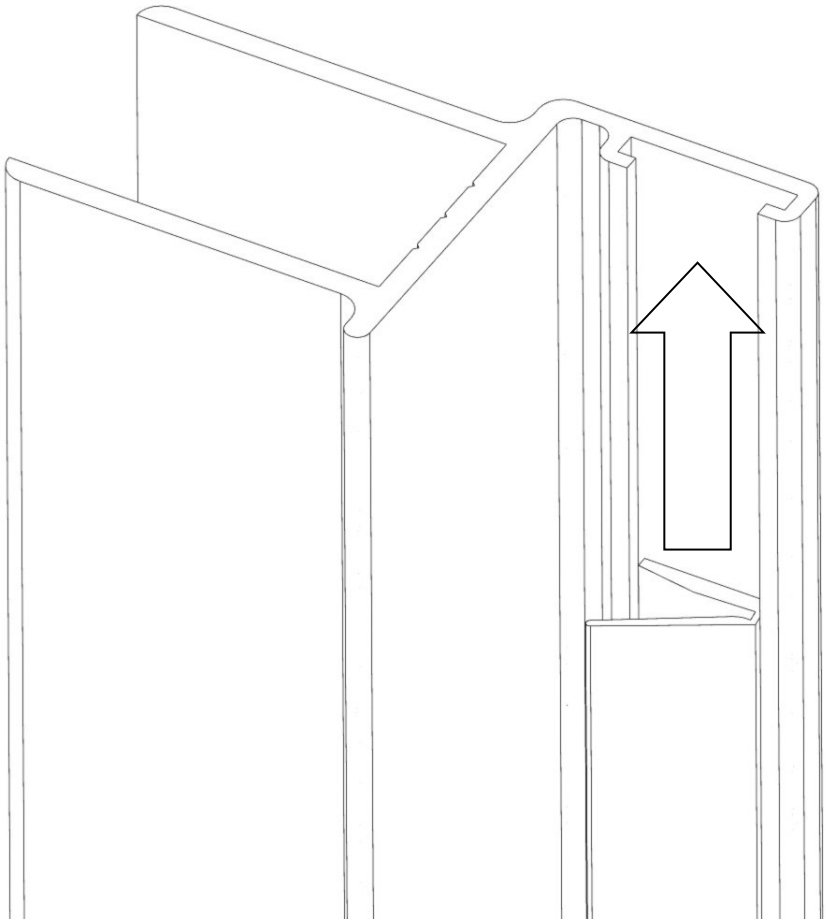

22 Slide the **SC552 Strike Jamb [5]** over the **SC508 Wall Jamb [4]**. Fully compress the jambs.

Make sure the strike jamb is placed to allow the door to close against the vinyl.

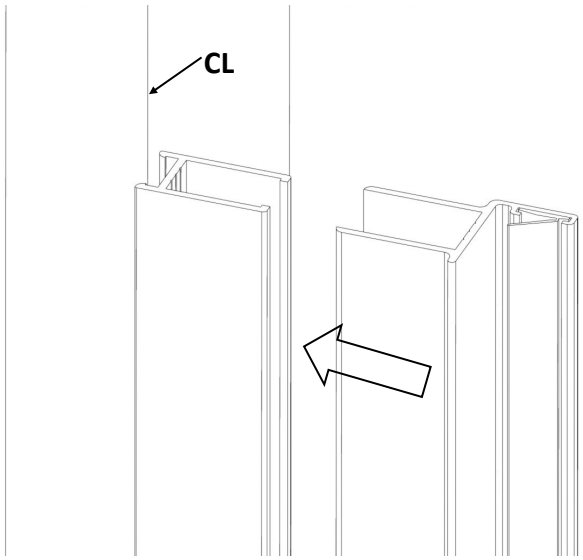

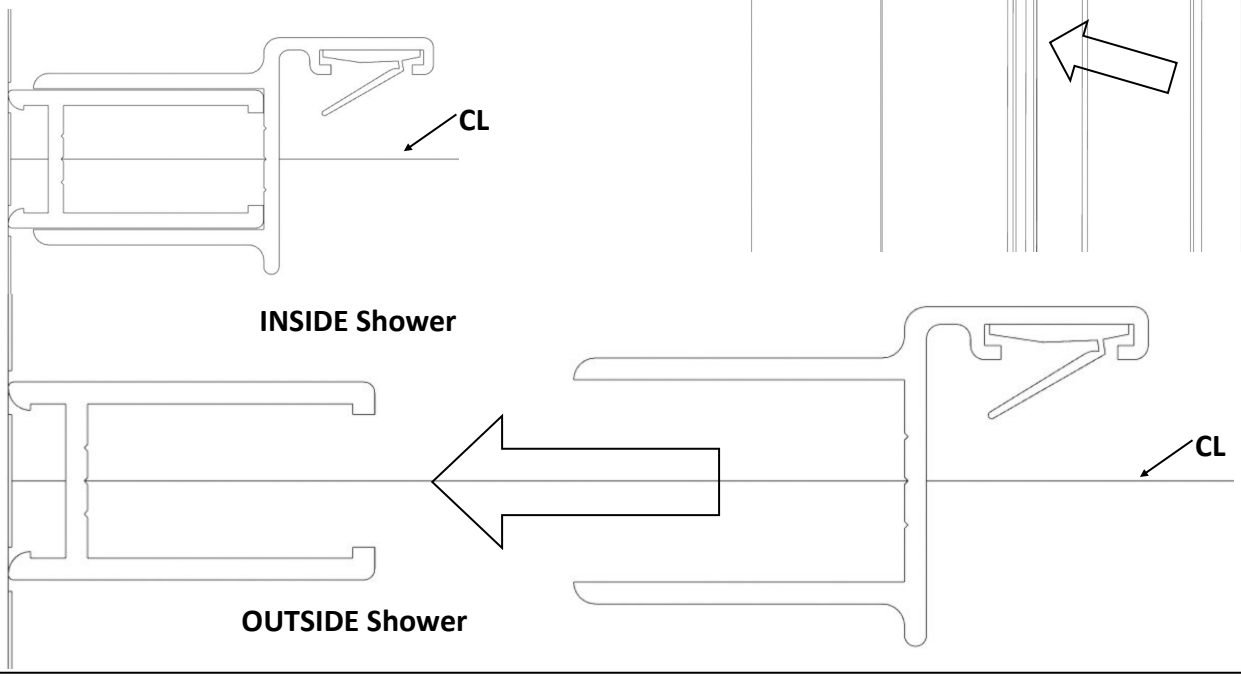

23 Close the door against the **SC552 Strike Jamb [5]**.Slide the **SC552 Strike Jamb [5]** over towards the door, leaving a consistent 3/16” gap between the glass and the jamb.

The jamb is designed to adjust for any out of plumb conditions the wall may have. This may make for an uneven reveal of the **SC508 wall jamb [4]**.

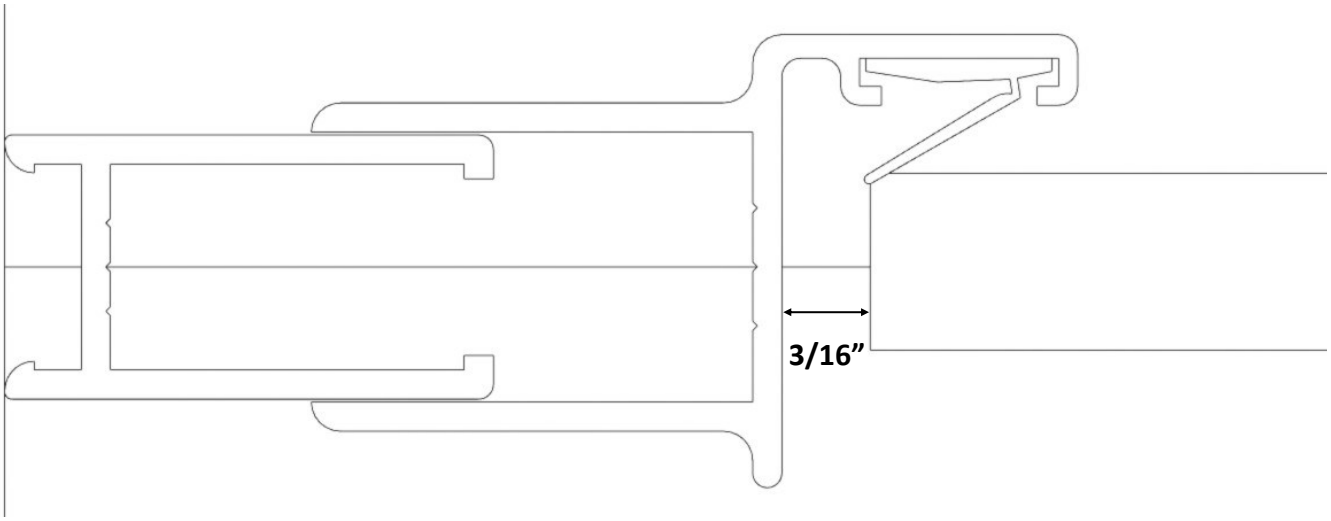

24 From **INSIDE SHOWER** drill 2 1/8” diameter holes through the inside wall of the **Strike and Wall Jambs.**

Locate the hole 1.5” from the top and bottom edges of the jamb, 3/4” from the wall.

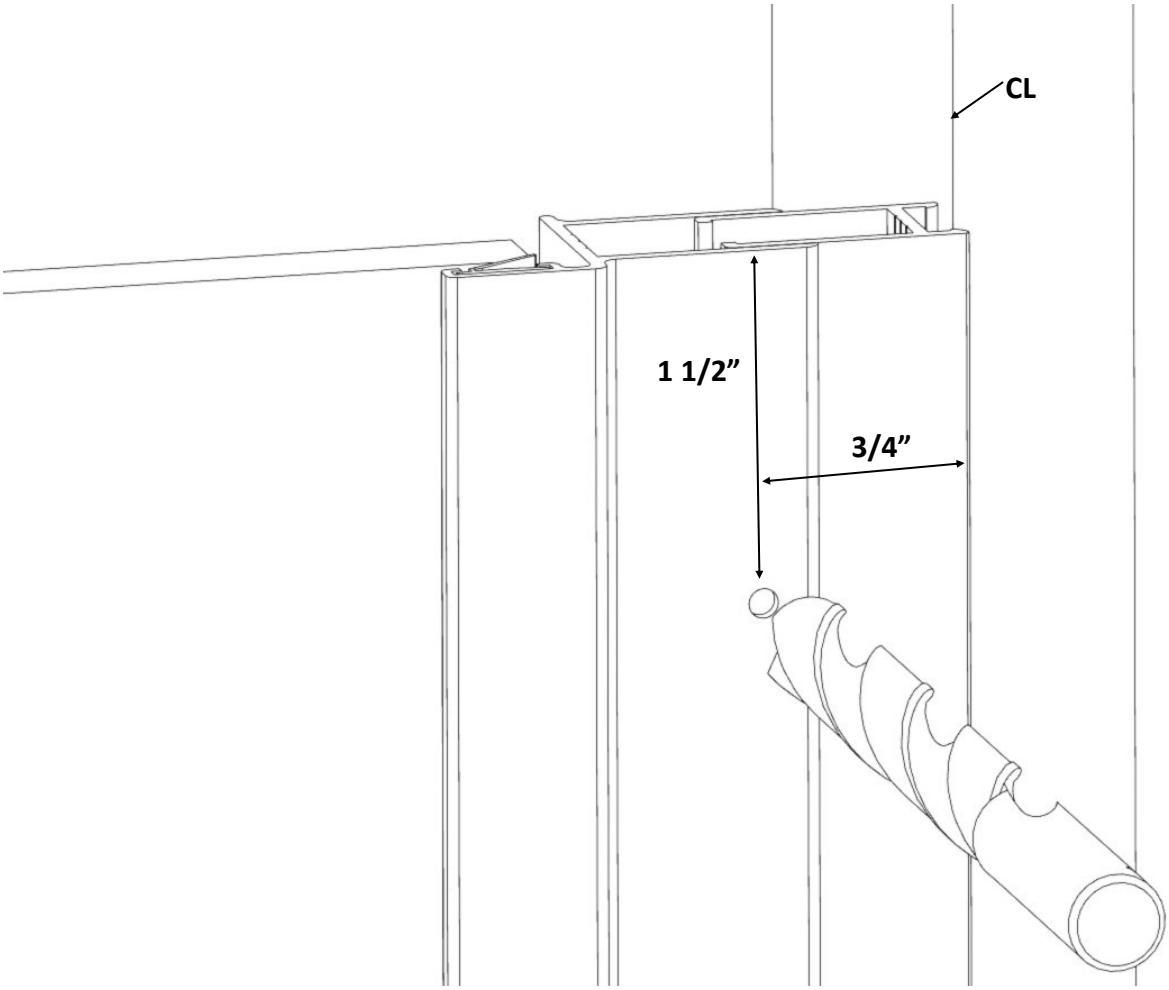

Insert screw **SCR24 [13]** into each hole to secure the strike jamb into position.

---

25 To prevent the door from sagging after final gap adjustment the hinge maybe shimmed to prevent movement.

Remove one back plate at a time and fill gaps (marked in the figure to the left) surrounding hinge with shims supplied in parts pack. Make sure to shim both hinges and use combination of shim thicknesses to fill entire gap.

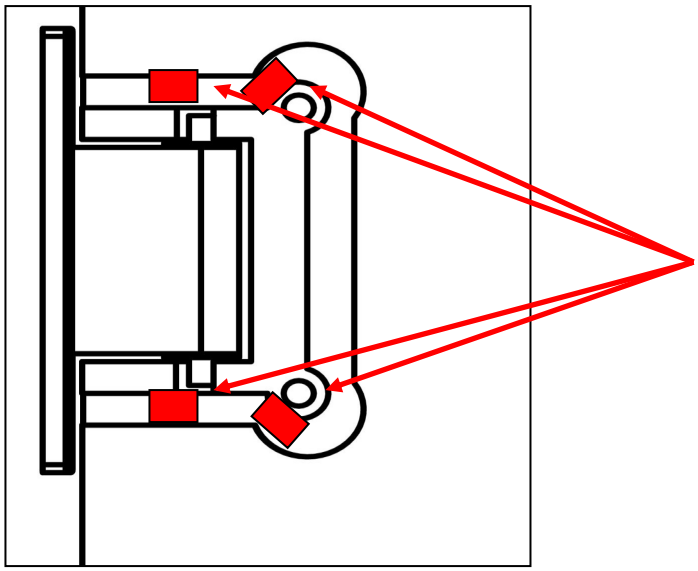

Handle Installation

26 Assemble parts as shown. Screw washers, end plates, and gaskets into one side of the handle through the glass. Then align the other side of the handle onto the bushing and tighten the set screws. The screw head should be inside the shower.

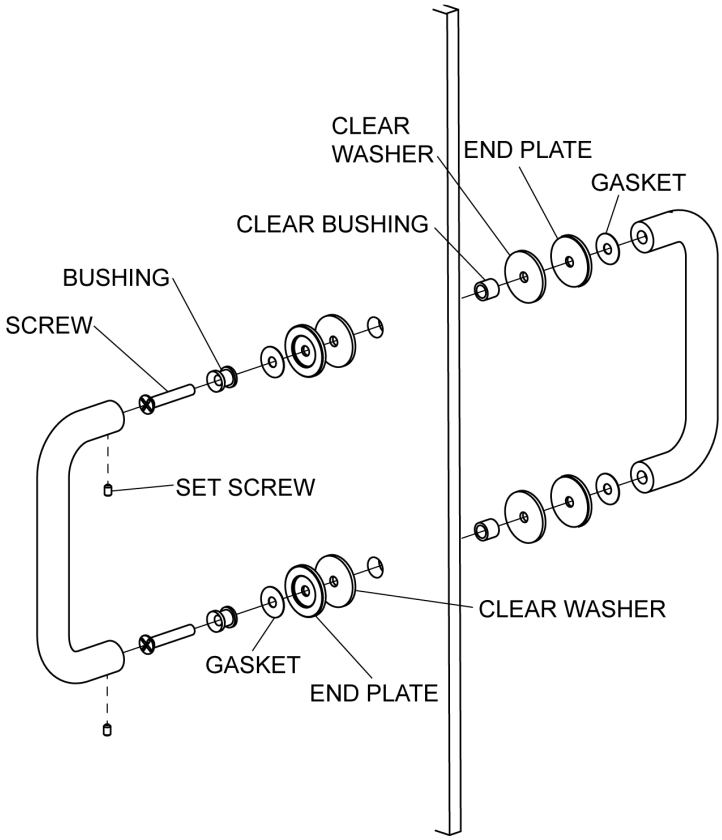

27 Place the Drip Vinyl onto the bottom of the door panel. Line it up on the hinge side of the door and cut it off flush with beginning of the Strike Jamb.

Once adjusted to fit, run a small bead of silicone between the drip vinyl and the glass to secure the vinyl sweep and prevent water from collecting inside the sweep if adjusted.

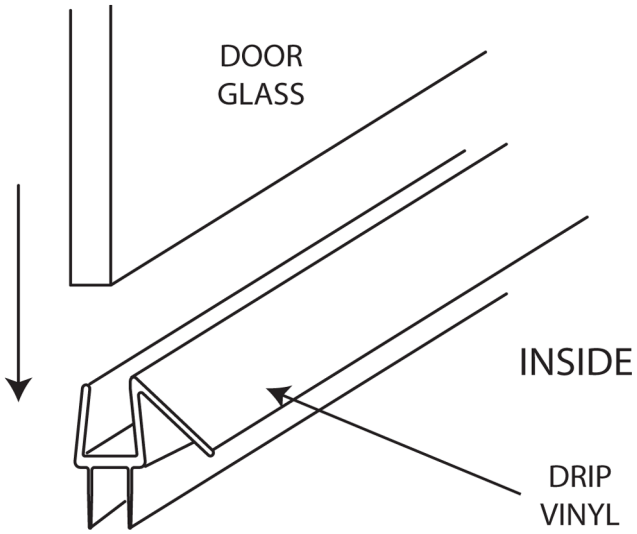

28 Inside the shower, carefully run a continuous bead of silicone between the wall an **SC508 Wall Jamb [4]** on the strike side. Apply another bead of silicone around where the jambs meet the threshold.

It is optional to also run a bead between the wall jamb and the wall on the outside of the shower.

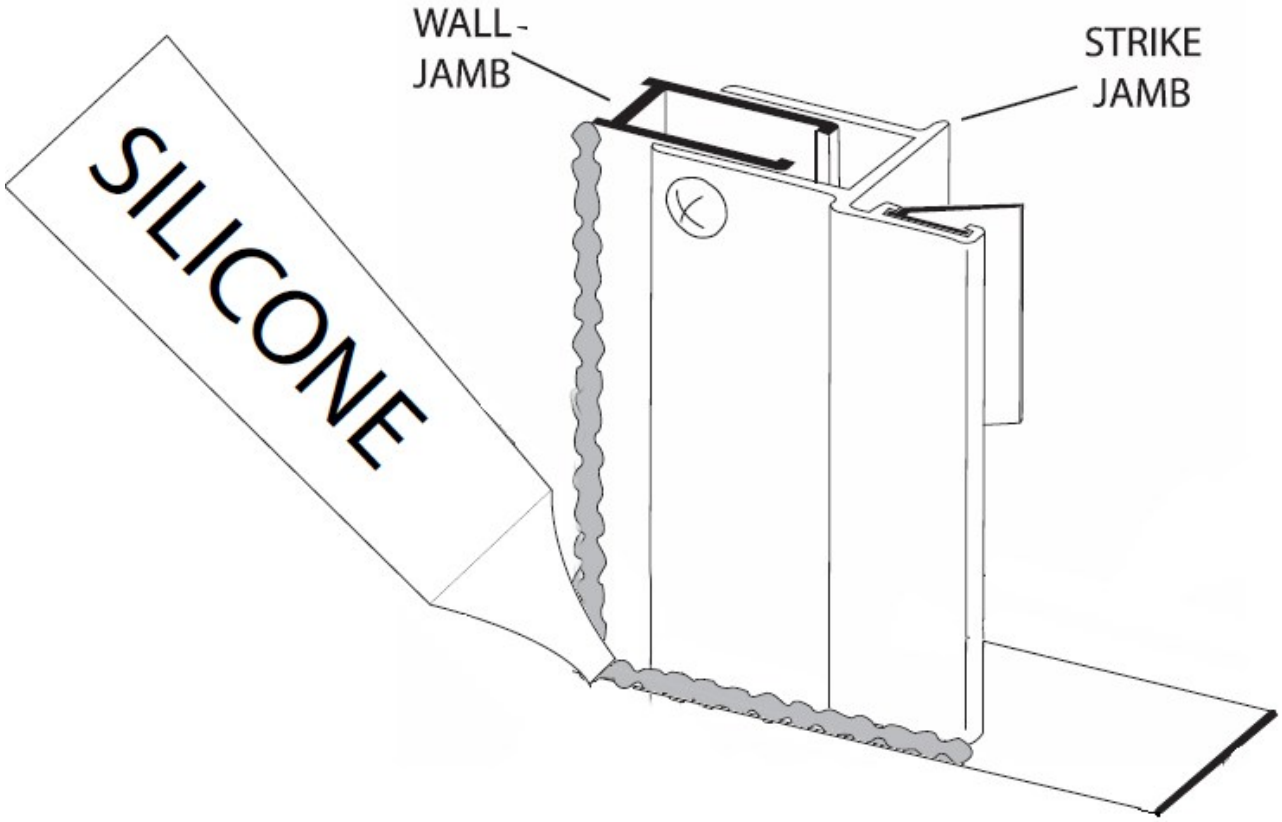

29 Inside the shower, carefully run a continuous bead of silicone where **SC982 Wall Jamb [2]** and **SC983 Hinge Jamb [3]** meet. Apply another continuous bead of silicone where the jamb and wall meet. Apply a final bead where the jambs and threshold meet.

It is option to also run a bead between the jamb and wall on the outside of the shower.

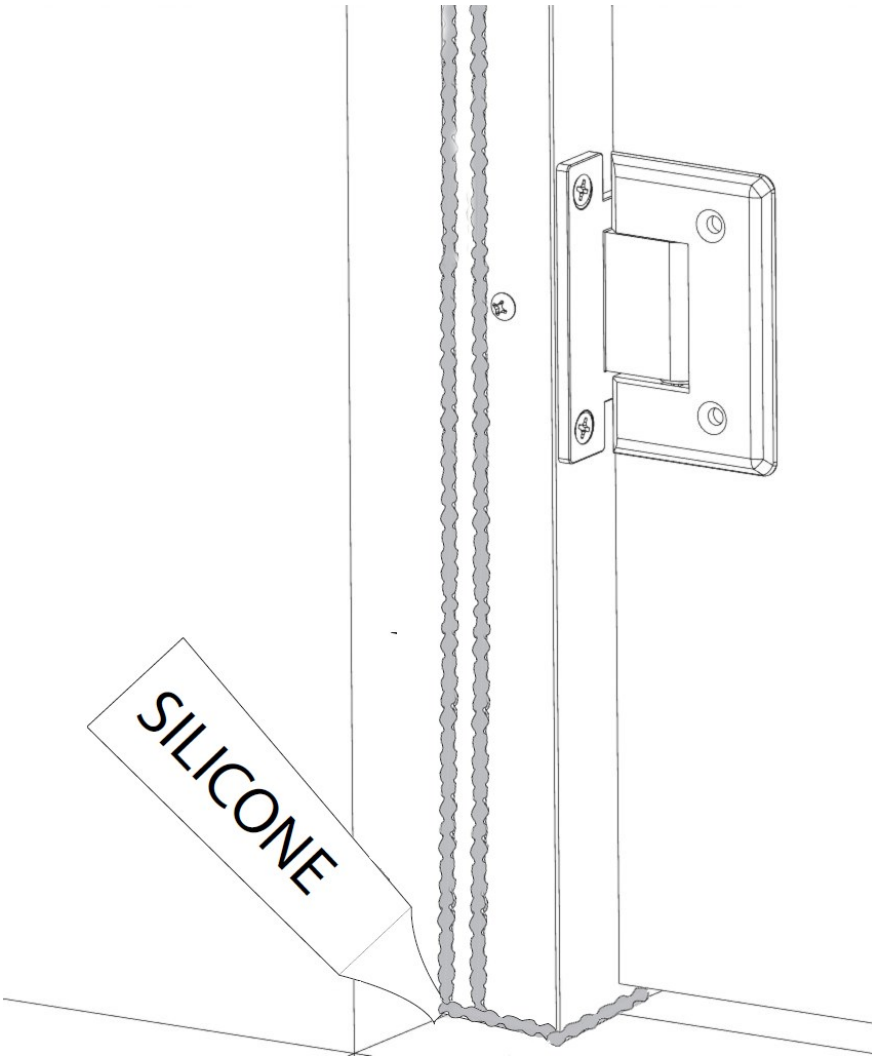

DO NOT use the shower before the silicone has cured!
Follow the manufacturers' recommendation for cure time (usually 24-48 hours) before using the shower.

NEED INSTALLATION HELP?

CALL 1-855-442-2082

MONDAY - FRIDAY

8:00AM - 5:00PM

EASTERN TIME