TILE REDI™
REDI BASE®

MODEL
3060CDL-CDFB

(Not to scale)

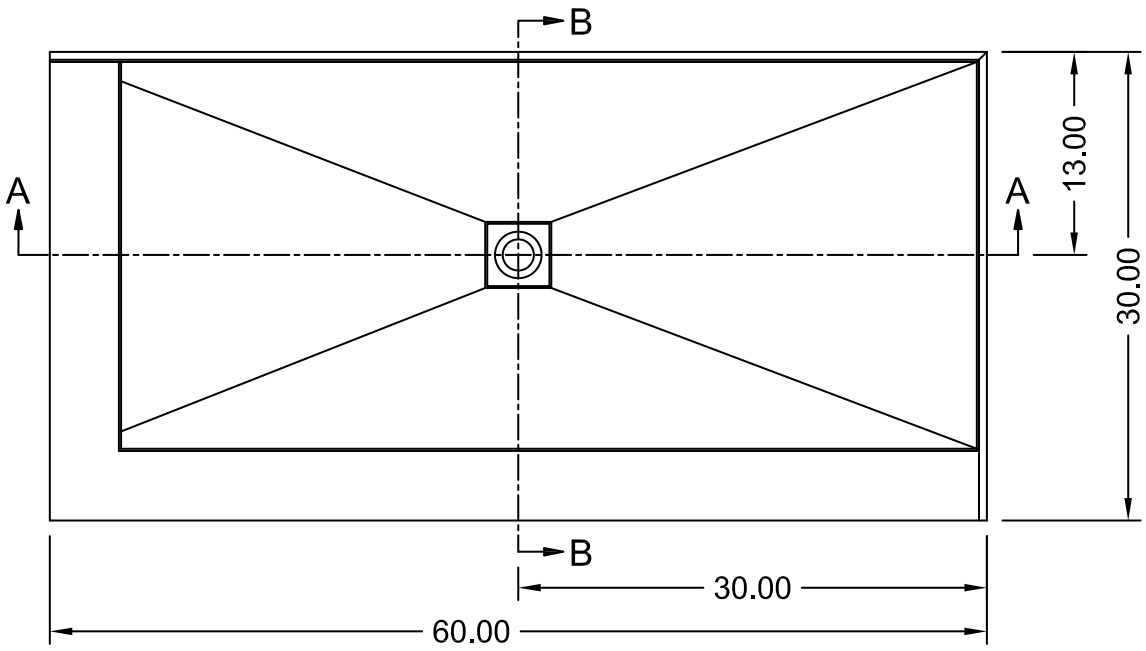

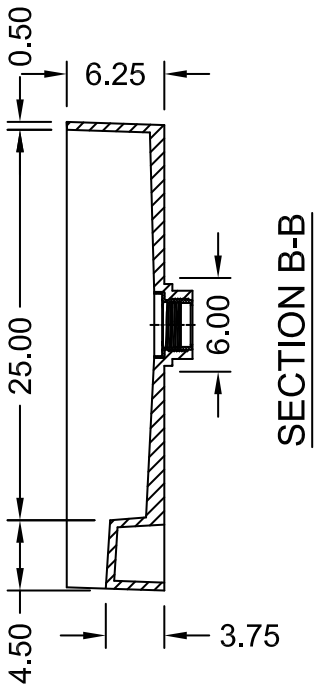

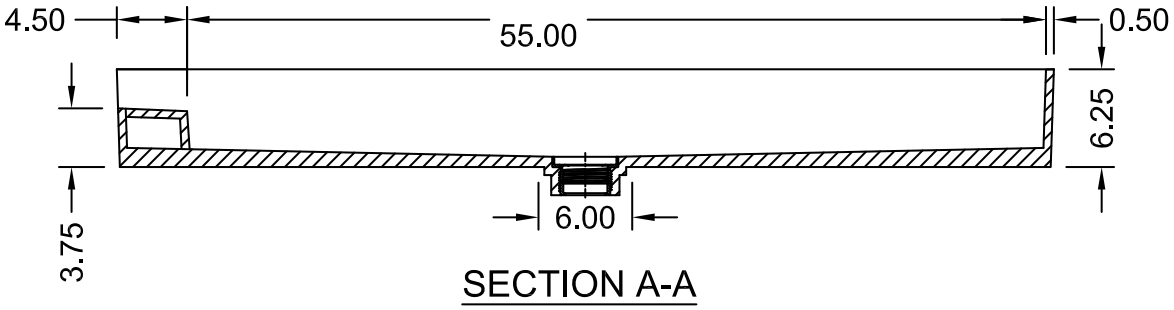

SECTION A-A

Tolerance: All dimensions are within tolerances of +/- 0.25" unless otherwise noted.

ANSI Z124.1-95 ASTM F462-79
ANSI Z124.2-95 B45.0-02
ICC/ANSI A117.1.98 B45.5-02

Toll Free: 800.232.6156
Tel: 954.323.0125
Fax: 954.344.8064
techsupport@tileredi.com
www.tileredi.com

2025.07.22

© 2025 TILE REDI USA, LLC